ORIGINAL LAYOUT SIZE – 22X34

CONSTRUCTION DRAWINGS FOR
CITY OF IOLA
0.100 MGD WASTEWATER TREATMENT PLANT

TWDB CWSRF PROJECT NO. 10422
GLO PROJECT NO. 24-065-165-F080

VICINITY MAP

SCALE : NONE
GRIMES COUNTY

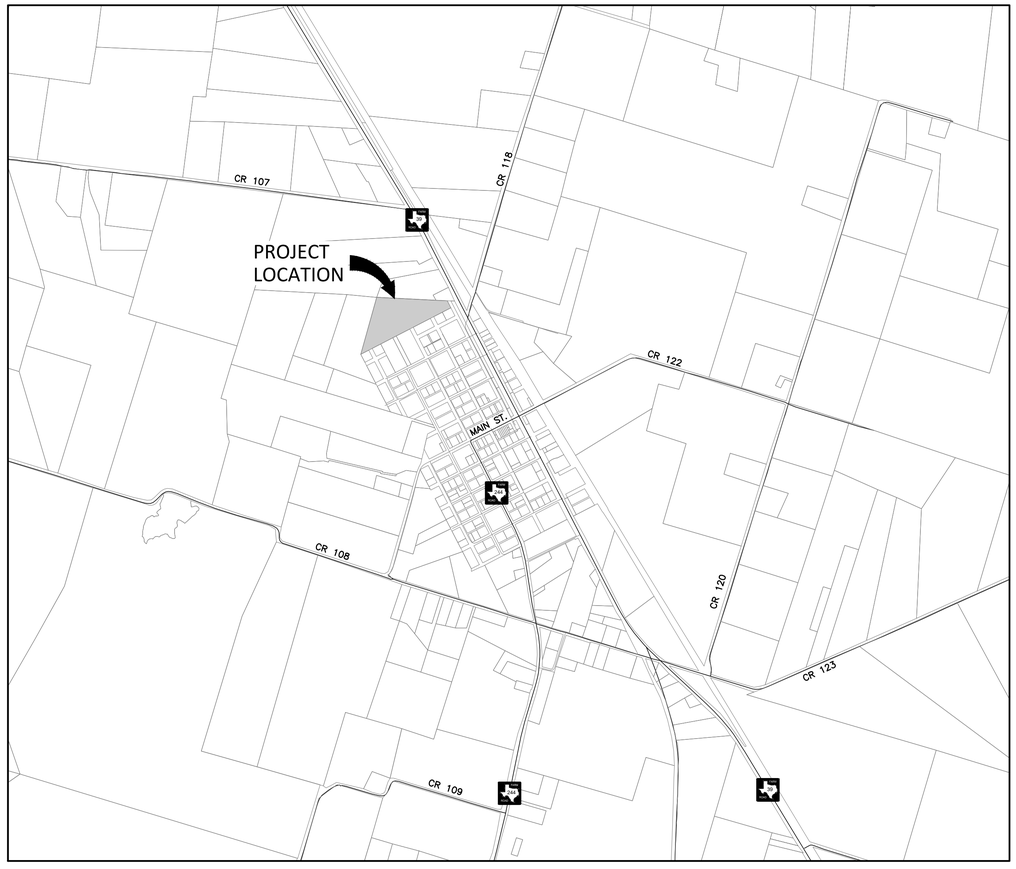

SHEET INDEX	
SHEET NUMBER	SHEET TITLE
	CIVIL
C1	COVER
C2	NOTES
C3	TCEQ NOTES
C4	HYDRAULIC PROFILE
C5	OVERALL PLAN
C6	SITE PLAN
C7	GRADING & EROSION 1
C8	GRADING & EROSION 2
C9	EFFLUENT PLAN & PROFILE
C10	LIFT STATION A
C11	INFLUENT PLAN & PROFILE
C12	ELEVATION SECTIONS
C13	CLARIFIER DETAILS
C14	TANK EQUIPMENT DETAILS
C15	PROJECT DETAILS 1
C16	PROJECT DETAILS 2
C17	SWPPP DETAILS
	STRUCTURAL
S1	STRUCTURAL DETAILS 1
S2	STRUCTURAL DETAILS 2
S3	LIFT STATION SECTIONS
	ELECTRICAL
E1	ELECTRICAL LEGENDS, SCHEDULES, AND NOTES
E2	ELECTRICAL CONDUIT SCHEDULE
E3	ELECTRICAL SITE LAYOUT
E4	ELECTRICAL ONE-LINE DIAGRAM SHEET 1 OF 2
E5	ELECTRICAL ONE-LINE DIAGRAM SHEET 2 OF 2
E6	ELECTRICAL CONTROL DIAGRAMS SHEET 1 OF 3
E7	ELECTRICAL CONTROL DIAGRAMS SHEET 2 OF 3
E8	ELECTRICAL CONTROL DIAGRAMS SHEET 3 OF 3
E9	ELECTRICAL DETAILS SHEET 1 OF 4
E10	ELECTRICAL DETAILS SHEET 2 OF 4
E11	ELECTRICAL DETAILS SHEET 3 OF 4
E12	ELECTRICAL DETAILS SHEET 4 OF 4

REV	DATE	COMMENTS
1	2/9/26	TWDB COMMENTS
0	12/3/25	ORIGINAL

PREPARED FOR:
CITY OF IOLA
P.O. BOX 84
IOLA, TEXAS 77861
TPDES WQ0016021-001

BLEYL ENGINEERING
PLANNING • DESIGN • MANAGEMENT
1722 Broadmoor, Suite 210, Bryan Tx. 77802
Texas Firm Registration No. F-678
Tel. 979-268-1125 Fax 979-260-3849
www.bleylengineering.com
BRYAN CONROE HOUSTON AUSTIN

COVER

CITY OF IOLA
0.100 MGD WASTEWATER
TREATMENT PLANT
TWDB CWSRF PROJECT NO. 10422
GLO PROJECT NO. 24-065-165-F080

STATE OF TEXAS
STEVE E. DUNCAN
83252
LICENSED
PROFESSIONAL ENGINEER
2/9/2026

DESIGN: SED
CAD: JDR | RVW: SED
PROJECT NO: 12693
SHEET: C1

SDUNCAN 2/11/2026 7:33:43 AM
Z:\12600\12693_IOLA-TWDB WASTEWATER SYSTEM\04 CAD\CD-12693\WWTP PROJECT\1-3 COVER & NOTES.DWG

ORIGINAL LAYOUT SIZE – 22X34

BLEYL ENGINEERING

STANDARD NOTES

1. THE CONTRACTOR SHALL ADHERE TO ALL APPLICABLE STANDARD DETAILS AND SPECIFICATIONS FOR PROPOSED IMPROVEMENTS.
2. ALL CONSTRUCTION SHALL BE IN ACCORDANCE WITH THE BIDSET PLANS AND SPECS.
3. REVISIONS TO THESE ENGINEERING PLANS MUST BE AUTHORIZED BY BLEYL ENGINEERING PRIOR TO CONSTRUCTION. BLEYL ENGINEERING – (979) 268–1125
4. THE CONTRACTOR SHALL:
   a. NOTIFY BLEYL ENGINEERING (979)–268–1125 AND ALL OTHER PERTINENT AGENCIES 48 HRS BEFORE STARTING WORK.
   b. THE CONTRACTOR SHALL NOTIFY THE OWNER AT LEAST 72 HOURS PRIOR TO COMMENCING WORK.
   c. NOTIFY ALL APPROPRIATE UTILITY COMPANIES 48 HOURS PRIOR TO ANY EXCAVATION.
   d. NOTIFY THE ENGINEER AND ALL PERTINENT AGENCIES OF ALL DESIRED FIELD CHANGES. THE ENGINEER'S APPROVAL MAY BE REQUIRED.
8. THE CONTRACTOR SHALL BE RESPONSIBLE FOR THE SECURITY AND SAFETY PROVISIONS REQUIRED TO PROTECT INDIVIDUALS, EQUIPMENT, MATERIALS AND WORKMANSHIP NECESSARY FOR THIS PROJECT. THE CONTRACTOR SHALL BE RESPONSIBLE FOR THE STORAGE OF MATERIALS IN SAFE AND WORKMANLIKE MANNER TO PREVENT INJURIES DURING AND AFTER WORKING HOURS UNTIL PROJECT COMPLETION.
9. THE CONTRACTOR SHALL ADVISE THE ENGINEER OF ANY APPARENT OR SPECIAL NEEDS TO COMPLETE THE SCOPE OF WORK INCLUDED IN THIS PROJECT. THESE MAY INCLUDE THE NEED FOR OWNER PROVIDED SERVICES SUCH AS WATER, STAFF AVAILABILITY, ETC.
10. ACCURATE RECORDS SHOWING THE INSTALLED LOCATIONS OF ALL IMPROVEMENTS SHALL BE MAINTAINED DURING CONSTRUCTION.
11. THE CONTRACTOR SHALL MAKE EVERY EFFORT TO MAINTAIN ACCESS DURING THE CONSTRUCTION PERIOD. SCHEDULING OF ACTIVITIES SHOULD EMPHASIZE ACCESSIBILITY TO THE PROJECT SITE. EXTENDED PERIODS OF RESTRICTED ACCESS MUST BE LIMITED.
12. CONTRACTOR SHALL COMPLY WITH ALL FEDERAL, STATE, AND LOCAL LAWS AND ALL UTILITY COMPANY REGULATIONS CONCERNING SAFETY AND HEALTH PRACTICES.
13. THE CONTRACTOR SHALL COMPLY WITH ALL APPLICABLE OSHA RULES AND REGULATIONS.
14. THE CONTRACTOR SHALL PROTECT EXISTING MONUMENTS, YARDS, PRIVATE UTILITIES, DRIVES, CURBS, MAIL BOXES, SIGNS, IMPROVEMENTS, CULVERTS, AND OWNER'S FACILITIES FROM DAMAGE DURING CONSTRUCTION. DAMAGE DONE TO THESE ITEMS SHALL BE REPAIRED AT CONTRACTOR'S EXPENSE. THE CONTRACTOR SHALL MOVE AND REPLACE SUCH MOVABLE ITEMS AS MAIL BOXES, TRAFFIC CONTROL, BUSINESS SIGNS, AND STREET SIGNS AS NECESSARY FOR CONSTRUCTION. FENCES OR STRUCTURES WHICH REQUIRE DISMANTLING OR REMOVAL SHALL BE RECONSTRUCTED OR REPLACED TO EQUAL OR BETTER THAN ORIGINAL CONDITION.
15. AT THE END OF ALL CONSTRUCTION ACTIVITIES, THE CONTRACTOR SHALL RESTORE EXISTING FACILITY (I.E. PROPERTY) EQUAL TO OR BETTER THAN EXISTING SITE CONDITIONS PRIOR TO CONSTRUCTION. CLEAN–UP ACTIVITIES SHALL BE MAINTAINED THROUGHOUT THE CONTRACT PERIOD.
16. THE CONTRACTOR SHALL TAKE SPECIAL CARE TO ENSURE THAT SURFACE DRAINAGE IS NOT IMPEDED BY CONSTRUCTION WORK.
17. THE CONTRACTOR SHALL BE RESPONSIBLE FOR THE MAINTENANCE AND PROTECTION OF CONSTRUCTION ACTIVITIES DURING THE CONTRACT PERIOD. THIS SHALL INCLUDE ANY EROSION CONTROL MEASURES AND RE–GRADING NECESSARY TO ACHIEVE THE LINES AND GRADES SET FORTH BY THESE PLANS.
18. CONTRACTOR SHALL PROVIDE AND INSTALL CONSTRUCTION FENCING AROUND SITE TO PREVENT NON–WORKERS FROM ACCESSING THE CONSTRUCTION AREA. EXISTING WOODEN FENCES MAY BE USED IN LIEU OF CONSTRUCTION FENCING WHERE THEY EXIST AND CAN PREVENT ACCESS TO THE CONSTRUCTION AREA.
19. CONTRACTOR SHALL COMPLY WITH STATE AND LOCAL REGULATIONS REGARDING STORM WATER POLLUTION PREVENTION. IT IS THE CONTRACTORS RESPONSIBILITY TO DEVELOP AND ENSURE THAT AN ADEQUATE STORM WATER POLLUTION PREVENTION PLAN IS IMPLEMENTED AND MAINTAINED. ALL SILT FROM THE CONSTRUCTION OF THE PROPOSED UTILITIES IS TO BE RETAINED ON SITE AND PREVENTED FROM BEING TRANSPORTED TO THE NATURAL DRAINAGE PATHWAYS. ALL SWPP DEVICES WILL BE PAID FOR BY THE CONTRACTOR AND WILL BE CONSIDERED INCIDENTAL TO THE PROPOSED UTILITY WORK. CONFORMANCE TO THESE REGULATORY REQUIREMENTS IS MANDATORY.
20. ALL TESTING PROCEDURES USED ON THIS PROJECT SHALL CONFORM TO THE TCEQ, AWWA, NSF OR APPLICABLE STANDARDS. THE TESTING EXPENSE SHALL BE BORNE BY THE CONTRACTOR UNLESS OTHERWISE SPECIFIED.
21. THE CONTRACTOR SHOULD BE AWARE THAT THERE ARE OVERHEAD AND UNDERGROUND ELECTRICAL, TELEPHONE, ETC. LINES WITHIN THE PROJECT SITE. THE CONTRACTOR AND HIS PERSONNEL SHALL EXERCISE CARE AROUND THESE LINES TO PREVENT DAMAGE TO LINES AND INJURY TO THE PERSONNEL. ANY DAMAGE SHALL BE REPAIRED AT CONTRACTOR'S EXPENSE.
22. ALL UNDERGROUND UTILITY LINES, SIZES, AND MATERIAL TYPES SHOWN ON THE PLANS ARE FOR THE PURPOSE OF MAKING THE CONTRACTOR AWARE THAT THEY EXIST. NEITHER THE OWNER, NOR THE ENGINEER GUARANTEES THE ACCURACY THEREOF. ALSO, THE LOCATIONS OF SOME EXISTING UTILITY LINES ARE NOT KNOWN AND THE CONTRACTOR SHALL VERIFY THE LOCATION, SIZE AND MATERIAL TYPES OF ALL UNDERGROUND UTILITIES PRIOR TO BEGINNING CONSTRUCTION. THE FINAL ALIGNMENT OF THE PROPOSED MAIN LINES ARE SUBJECT TO MODIFICATION PENDING THE ESTABLISHMENT OF EXISTING UTILITY LOCATIONS.
23. THE CONTRACTOR SHALL UNCOVER EXISTING UTILITIES AT ALL "POINTS OF CROSSING" TO DETERMINE IF CONFLICTS EXIST BEFORE COMMENCING ANY CONSTRUCTION. NOTIFY THE ENGINEER AT ONCE OF ANY CONFLICTS.
24. THE LATEST TCEQ REGULATIONS MUST BE FOLLOWED FOR CROSSINGS OF SANITARY SEWER MAINS AND WATER MAINS. IT IS THE INTENT THAT THE MOST ECONOMICALLY ACCEPTABLE ALTERNATIVE BE ELECTED. ACCORDINGLY, FIELD VERIFICATION OF EXISTING UTILITY GRADES IS IMPERATIVE.
25. FINAL COVER OF INSTALLED LINES SHALL NOT BEGIN PRIOR TO OBSERVATION AND ACCEPTANCE BY THE OWNER OR ENGINEER. THE CONTRACTOR SHALL CONTACT THE OWNER BY 4:00 P.M. REGARDING THE SCHEDULING OF THESE MONITORING VISITS.
26. CONNECTIONS TO EXISTING LINES SHALL INCLUDE ALL REQUIRED FITTINGS, MATERIALS REQUIRED TO MAKE A SUCCESSFUL TIE IN MEETING ALL APPLICABLE STANDARDS.
27. THE LOADING AND UNLOADING OF ALL MATERIALS AND EQUIPMENT SHALL BE IN ACCORDANCE WITH THE MANUFACTURER'S RECOMMENDED PRACTICES AND SHALL AT ALL TIMES BE PERFORMED WITH CARE TO AVOID ANY DAMAGE TO THE MATERIAL. THE CONTRACTOR SHALL LOCATE AND PROVIDE THE NECESSARY STORAGE AREAS FOR MATERIALS AND EQUIPMENT.
28. ALL MATERIALS AND EQUIPMENT SHALL BE BOTH FURNISHED AND INSTALLED UNLESS OTHERWISE NOTED.
29. CONTRACTOR SHALL PROVIDE SHEETING, SHORING AND BRACING AS NECESSARY TO PROTECT WORKMEN AND EXISTING UTILITIES DURING ALL PHASES OF CONSTRUCTION AS PER OSHA REQUIREMENTS.
30. TRENCH SAFETY REQUIREMENTS SHALL BE IN ACCORDANCE WITH OSHA STANDARD 29 CFR PART 1926 P. THE CONTRACTOR IS RESPONSIBLE FOR CONSTRUCTING AND MAINTAINING TRENCH SAFETY. COST FOR ANY TRENCH SAFETY SYSTEMS THAT REQUIRE AN ENGINEER'S SEAL SHALL BE THE RESPONSIBILITY OF THE CONTRACTOR AND SHALL BE PERFORMED AT NO ADDITIONAL COST TO THE PROJECT.
31. IF AND WHERE DEWATERING IS NECESSARY, CONTRACTOR SHALL SUBMIT A DEWATERING PLAN TO THE ENGINEER FOR APPROVAL BEFORE CONSTRUCTION.
32. CONTRACTOR SHALL INSTALL ALL EROSION/SEDIMENT CONTROL FEATURES SHOWN ON THE EROSION CONTROL WORKMAP PRIOR TO GRADING OR OTHER CONSTRUCTION ACTIVITIES. CONTRACTOR SHALL ADHERE TO ALL TEXAS POLLUTANT DISCHARGE ELIMINATION SYSTEM REQUIREMENTS FOR CONSTRUCTION SITES, INCLUDING INSTALLATION, MAINTENANCE, AND REMOVAL OF ALL NECESSARY STORMWATER POLLUTION PROTECTION MEASURES AND NOTICES. CONTRACTOR SHALL NOTIFY THE TCEQ, MS4, AND PUBLIC AS REQUIRED AND CREATE, UPDATE, AND MAINTAIN A STORMWATER POLLUTION PREVENTION PLAN AS REQUIRED, INCLUDING REQUIRED INSPECTION.
33. THE CONTRACTOR SHALL CONDUCT HIS OPERATIONS IN A MANNER SUCH THAT TRUCKS AND OTHER VEHICLES DO NOT CREATE A DIRT NUISANCE OR SAFETY HAZARD IN ANY STREETS, PUBLIC OR PRIVATE. CLEAN UP OF STREETS SHALL BE DONE DAILY AT NO ADDITIONAL COST TO THE PROJECT.
34. ALL PIPES AND STRUCTURES SHALL BE INSTALLED TO MANUFACTURER SPECIFICATIONS, INCLUDING MAXIMUM BENDING RADIUS, JOINT DEFLECTION, FITTINGS, SEALANTS, ETC.
35. NO EXCAVATIONS SHALL BE LEFT OPEN OVERNIGHT. ALL EXCAVATIONS WHICH CANNOT BE BACKFILLED OVERNIGHT SHALL BE COVERED WITH STEEL SHEETING WHEN IN PAVED AREAS. FOR NON–PAVED AREAS STEEL SHEETING, WOOD PLANKING OR OTHER MATERIAL WHICH IS APPROVED BY THE CITY MAY BE USED. COMPLETELY CORDON OFF THE EXCAVATION AREA WITH PLASTIC CONSTRUCTION FENCING APPROVED BY THE CITY. THE CONTRACTOR IS RESPONSIBLE FOR THE PROTECTION AND SAFETY OF EXCAVATION AREAS.
36. IT IS SOLELY THE CONTRACTOR'S RESPONSIBILITY TO VERIFY AND DETERMINE THE DEPTH, LOCATION, ELEVATION, ALIGNMENT AND EXISTENCE OF ALL SURFACE OR UNDERGROUND UTILITIES AND STRUCTURES IN AND AROUND THE VICINITY OF THE WORK TO BE PERFORMED PRIOR TO COMMENCING CONSTRUCTION. THE CONTRACTOR SHALL NOTIFY THE OWNER IN WRITING OF ANY CONFLICTS FOUND PRIOR TO COMMENCING CONSTRUCTION. THE CONTRACTOR SHALL ALLOW AMPLE TIME TO THE OWNER TO DETERMINE A RESOLUTION TO THE CONFLICT. NO ADDITIONAL PAYMENT SHALL BE MADE FOR DELAYS DUE TO SUCH CONFLICTS OR WORK DONE WITHOUT DETERMINING THE ACTUAL LOCATION OF UTILITIES OR OBJECTS.
37. EXISTING PAVEMENT, CURB, SIDEWALK, DRIVEWAY, AND LANDSCAPED AREAS DAMAGED DURING CONSTRUCTION BY THE CONTRACTOR SHALL BE REPLACED BY THE CONTRACTOR TO ORIGINAL CONDITION AT THE CONTRACTOR'S EXPENSE. ALL AREAS WHERE EXISTING VEGETATION AND GRASS HAS BEEN REMOVED OR SIGNIFICANTLY REDUCED BY CONSTRUCTION ACTIVITIES, THE CONTRACTOR SHALL ADEQUATELY APPLY REVEGETATIVE COVERINGS OVER THE AREA WITHIN 14 CALENDAR DAYS AFTER LAST DISTURBANCE AND THEN WATER THE AREAS UNTIL GROWTH IS WELL ESTABLISHED AND THE SITE IS PROVISIONALLY ACCEPTED BY THE CITY'S PROJECT MANAGER. REVEGETATIVE COVERINGS FOR DISTURBED AREAS SHALL BE:
   a. FOR LANDSCAPED YARDS, APPLY BLOCK SOD;
   b. FOR NATURAL VEGETATION AND OTHER GRASSY AREAS APPLY HYDROMULCH.
38. ALL CONSTRUCTION STAKING FOR THE IMPROVEMENTS REQUIRED ON THIS PROJECT WILL BE PROVIDED BY CONTRACTOR. CONTRACTOR SHALL USE A TEXAS REGISTERED PROFESSIONAL LAND SURVEYOR TO PERFORM THE CONSTRUCTION STAKING AND TO VERIFY THE LOCATIONS OF ALL POTENTIAL ALIGNMENT CONFLICTS SPECIFICALLY CALLED FOR ON THE PLANS. CONSTRUCTION STAKING SHALL BE CONSIDERED INCIDENTAL AND CONTRACTOR SHALL INCLUDE COSTS IN RELATED ITEMS OF WORK. CONTRACTOR SHALL USE GRADE CONTROL TO ENSURE FLOW LINES AND INVERTS ARE INSTALLED AT GRADES AND ELEVATIONS SHOWN.
39. ALL TRENCHING AND BACKFILLING SHALL BE PERFORMED PER THE SPECIFICATIONS. TESTING WILL BE PERFORMED BY A CERTIFIED LABORATORY AT THE OWNER'S EXPENSE, TO VERIFY PROPER BEDDING AND BACKFILL. ANY WORK THAT DOES NOT PASS TESTING SHALL BE REPLACED AND RETESTED AT CONTRACTOR'S EXPENSE. STRUCTURAL AREAS SHALL INCLUDE ALL SIDEWALKS AND SHALL EXTEND 5' BEYOND THE CURB LINES OF ALL STREETS, ALLEYS AND PARKING AREAS.
40. UNLESS OTHERWISE NOTED, ALL WATER, GAS AND SEWER LINE TIE–INS AND CONNECTIONS SHALL BE CONSIDERED SUBSIDIARY TO THEIR REQUIRED COMPONENTS AS LISTED IN THE BID TABS. NO SEPARATE PAYMENT WILL BE MADE FOR APPURTENANCES NECESSARY TO INSTALL SEWER LINE ITEMS ACCORDING TO SPECIFICATIONS.
41. UNLESS OTHERWISE NOTED, CONTRACTOR SHALL ONLY BE COMPENSATED FOR THE PIPE, FITTINGS, CLEANOUTS, MANHOLES, AND OTHER APPURTENANCES THAT ARE ACTUALLY INSTALLED FOR THE UTILITY LINES AND OTHER IMPROVEMENTS REQUIRED FOR THIS PROJECT. REFER TO APPLICABLE TECHNICAL SPECIFICATION SECTIONS FOR SPECIFIC INFORMATION ON MEASUREMENT AND PAYMENT, ELIMINATION/ADDITION OF FITTINGS AND RELATED RESTRAINED JOINT PIPE LENGTHS, LAYING SCHEDULES, AND OTHER IMPORTANT REQUIREMENTS ON THE SEWER LINES AND OTHER IMPROVEMENTS ON THIS PROJECT.
42. UNLESS SPECIFICALLY STATED, AND OTHERWISE PROVIDED FOR ON THE BID FORM, ALL WORK DESCRIBED IN THESE STANDARD NOTES SHALL BE CONSIDERED INCIDENTAL TO THE ITEMS OF WORK LISTED ON THE BID PROPOSAL FORM AND NO SEPARATE PAYMENT WILL BE MADE TO THE CONTRACTOR FOR SUCH WORK.
43. ANY REQUIRED CHANGES TO THE DRAWINGS RESULTING FROM THE ACCEPTANCE OF ALTERNATES AND/OR SUBSTITUTIONS ARE THE RESPONSIBILITY OF THE CONTRACTOR AND SHALL BE SUBMITTED TO THE ENGINEER FOR APPROVAL.

PROJECT NOTES

1. SURVEYING WAS PERFORMED BY WISNOSKI LAND SURVEYING, LLC
2. GEOTECHNICAL INVESTIGATION WAS PERFORMED BY CME TESTING AND ENGINEERING, INC IN APRIL 2024.
3. CONTRACTOR TO COMPLY WITH ALL APPLICABLE RECOMMENDATIONS IN THE TEXAS PARKS & WILDLIFE DEPARTMENT LETTER DATED MARCH 30, 2022 FOUND IN THE ATTACHMENTS TO THE PROJECT MANUAL.

GRADING NOTES

1. GENERAL CONTRACTOR AND ALL SUBCONTRACTORS SHALL VERIFY THE SUITABILITY OF ALL EXISTING AND PROPOSED SITE CONDITIONS INCLUDING GRADES AND DIMENSIONS BEFORE STARTING CONSTRUCTION. THE ENGINEER SHALL BE NOTIFIED IMMEDIATELY OF ANY DISCREPANCIES.
2. BEFORE STARTING CONSTRUCTION, CONTRACTOR SHALL VERIFY BENCHMARK ELEVATION AND NOTIFY ENGINEER IF ANY DISCREPANCY AND/OR CONFLICT IS FOUND.
3. CONTRACTOR SHALL ENSURE THERE IS POSITIVE DRAINAGE FROM THE PROPOSED BUILDINGS AND NO PONDING IN PAVED AREAS, AND SHALL NOTIFY ENGINEER IF ANY GRADING DISCREPANCIES ARE FOUND IN THE EXISTING AND PROPOSED GRADES PRIOR TO PLACEMENT OF PAVEMENT OR UTILITIES.
4. CONTRACTOR SHALL PROTECT ALL MANHOLE COVERS, VALVE COVERS, VAULT LIDS, FIRE HYDRANTS, POWER POLES, GUY WIRES, AND TELEPHONE BOXES THAT ARE TO REMAIN IN PLACE AND UNDISTURBED DURING CONSTRUCTION.
5. ALL EXISTING CONCRETE PAVING, SIDEWALK, AND CURB DEMOLITION SHALL BE REMOVED AND DISPOSED OF BY CONTRACTOR. DISPOSAL SHALL BE AT AN APPROVED OFF–SITE, LAWFUL LOCATION, UNLESS DIRECTED OTHERWISE BY THE OWNER.

STORM NOTES

1. ALL STORM SEWER CONSTRUCTED IN SIDE LOT EASEMENT SHALL BE R.C.P (C–76, CLASSIII) AND SHALL BE EMBEDDED IN ACCORDANCE WITH MONTGOMERY COUNTY STANDARDS.
2. ALL SEWER UNDER PROPOSED OR FUTURE PAVEMENT AND TO A POINT ONE (1) FOOT BACK OF ALL PROPOSED OR FUTURE CURBS SHALL BE BACKFILLED WITH 1–1/2 SACK CEMENT/C.Y. STABLIZED SAND TO WITHIN ONE (1) FOOT OF SUBGRADE. THE REMAINING DEPTH OF TRENCH SHALL BE BACKFILLED WITH SUITABLE EARTH MATERIAL.
3. ALL TRENCH BACKFILL SHALL BE IN 8" LIFTS, WITH TESTS TAKEN AT 100 FOOT INTERVALS IN EACH LIFT, AND MECHANICALLY COMPACTED TO A DENSITY OF NOT LESS THAN 95% OF THE MAXIMUM DRY DENSITY AS DETERMINED BY THE STANDARD PROCTOR COMPACTION TEST (ASTM D–698/AASHTO T99).
4. CIRCULAR AND ELLIPTICAL REINFORCED CONCRETE PIPE SHALL BE INSTALLED USING RUBBER GASKET JOINT CONFORMING TO ASTM C443 AND ASTM C877 RESPECTIVELY.
5. ALL STORM SEWER PIPES AND INLET LEADS SHALL BE 24" AND LARGER R.C.P. (C–76, CLASSIII).
6. CONTRACTOR SHALL PROVIDE 12" MINIMUM VERTICAL CLEARANCE AT STORM SEWER AND WATER LINE CROSSINGS.
7. ADJUST MANHOLE COVERS TO GRADE CONFORMING TO REQUIREMENTS OF SECTION 02086–ADJUSTING MANHOLES, INLETS, AND VALVE BOXES TO GRADE.
8. ALL DITCHES SHALL BE GRADED TO PROPOSED ELEVATIONS TO ENSURE PROPER DRAINAGE. ALL OUTFALLS SHALL BE PROPERLY BACKFILLED AND COMPACTED. ALL DISTURBED AREA SHALL BE REGRADED, SEEDED, AND FERTILIZED.
9. ALL DRIVEWAYS SHALL BE LOCATED TO AVOID EXISTING CURB INLET STRUCTURE.

TWBD NOTES

1. STANDARD ENVIRONMENTAL CONDITIONS:
- NO ACTIVITY IS AUTHORIZED THAT IS LIKELY TO JEOPARDIZE THE CONTINUED EXISTENCE OF A THREATENED OR ENDANGERED SPECIES AS LISTED OR PROPOSED FOR LISTING UNDER THE FEDERAL ENDANGERED SPECIES ACT (ESA), OR THE STATE OF TEXAS PARKS AND WILDLIFE CODE ON THREATENED, ENDANGERED AND STATE–LISTED SPECIES, OR TO DESTROY OR ADVERSELY MODIFY THE HABITAT OF SUCH SPECIES
- IF A THREATENED, ENDANGERED, OR STATE–LISTED SPECIES IS ENCOUNTERED DURING CONSTRUCTION. THE CONTRACTOR MUST IMMEDIATELY CEASE WORK IN THE AREA OF THE ENCOUNTER, AVOID DISTURBANCE OF THE ANIMAL OR PLANT, AND NOTIFY THE TWDB AND THE OWNER, WHO WILL IMMEDIATELY IMPLEMENT ACTIONS IN ACCORDANCE WITH THE ESA AND APPLICABLE STATE STATUES. THESE ACTIONS MUST INCLUDE REPORTING THE ENCOUNTER TO THE TWDB, THE U.S. FISH AND WILDLIFE SERVICE, AND THE TEXAS PARKS AND WILDLIFE DEPARTMENT, OBTAINING ANY NECESSARY APPROVALS OR PERMITS TO ENABLE THE WORK TO CONTINUE, AND IMPLEMENTING OTHER MITIGATION ACTIONS AS DIRECTED. THE CONTRACTOR MUST NOT RESUME CONSTRUCTION IN THE AREA OF THE ENCOUNTER UNTIL AUTHORIZED TO DO SO BY THE OWNER.

2. SPECIAL ENVIRONMENTAL CONDITIONS:

AN ENVIRONMENTAL REVIEW OF THE PROPOSED PROJECT CONSISTENT WITH NEPA HAS BEEN COMPLETED FOLLOWING THE GUIDELINES PROVIDED IN 31 TAC § 375.61. MITIGATION MEASURES WERE DEFINED THROUGH THE AGENCY COORDINATION PROCESS AND PUBLIC PARTICIPATION AND ARE LISTED BELOW AS APPLICABLE ENVIRONMENTAL CONDITIONS. THESE CONDITIONS WILL PERTAIN TO THE PROJECT THROUGHOUT CONSTRUCTION AND BEYOND AS WARRANTED. BASED ON INFORMATION PROVIDED BY THE CITY, THE PROPOSED NEW WASTEWATER SYSTEM PROJECT IS CONSIDERED ENVIRONMENTALLY SOUND WITH THE FOLLOWING GENERAL AND ENVIRONMENTAL CONDITIONS:
- CONSISTENT WITH THE ENDANGERED SPECIES ACT OF 1973, AS AMENDED, THE MIGRATORY BIRD TREATY ACT, AND TEXAS PARKS AND WILDLIFE CODE CHAPTER 64, VEGETATION CLEARING MUST BE EXCLUDED DURING THE GENERAL BIRD NESTING SEASON, MARCH 15 THROUGH SEPTEMBER 15, TO AVOID ADVERSE IMPACTS TO BREEDING BIRDS. IF VEGETATION CLEARING DURING THIS TIME IS UNAVOIDABLE, THE AREA PROPOSED FOR DISTURBANCE WILL BE SURVEYED BY A QUALIFIED BIOLOGIST DURING THE NESTING PERIOD TO IDENTIFY OCCUPIED NESTS. IF NESTS ARE OBSERVED DURING SURVEYS, A VEGETATION BUFFER AREA OF NO LESS THAN 150 FEET IN DIAMETER WILL REMAIN AROUND THE NEST UNTIL ALL YOUNG HAVE FLEDGED. STATE AND FEDERAL REGULATIONS AS CURRENTLY INTERPRETED DO NOT PERMIT INCIDENTAL TAKE.
- FOR SOIL STABILIZATION AND REVEGETATION OF DISTURBED AREAS WITHIN THE PROJECT AREA, EROSION AND SEED/MULCH STABILIZATION MATERIALS WILL BE USED THAT AVOID ENTANGLEMENT HAZARDS TO WILDLIFE SPECIES. BECAUSE THE MESH FOUND IN MANY EROSION CONTROL BLANKETS OR MATS POSE AN ENTANGLEMENT HAZARD TO WILDLIFE, NO–TILL DRILLING, HYDROMULCHING (AVOIDING PLASTIC INGREDIENTS), AND/OR HYDROSEEDING WILL BE UTILIZED. IF EROSION CONTROL BLANKETS OR MATS CANNOT BE AVOIDED, THE USE OF NETTING AND PLASTIC MESH MATTING WILL BE AVOIDED.
- IF CONSTRUCTION OCCURS DURING TIMES WHEN WATER IS PRESENT IN STREAMS OR OTHER WATERBODIES AND DEWATERING ACTIVITIES OR OTHER HARMFUL CONSTRUCTION ACTIVITIES ARE INVOLVED (SUCH AS PLACEMENT OF TEMPORARY OR PERMANENT FILLS), THEN POTENTIALLY IMPACTED NATIVE AQUATIC RESOURCES WILL BE RELOCATED IN CONJUNCTION WITH A PERMIT TO INTRODUCE FISH, SHELLFISH OR AQUATIC PLANTS INTO PUBLIC WATERS AND AN AQUATIC RESOURCE RELOCATION PLAN (ARRP). THE ARRP SHOULD BE COMPLETED AND APPROVED BY THE TEXAS PARKS & WILDLIFE DEPARTMENT 30 DAYS PRIOR TO ACTIVITY WITHIN PROJECT WATERS AND/OR RESOURCE RELOCATION AND SUBMITTED WITH AN APPLICATION FOR A NO–COST PERMIT TO INTRODUCE FISH, SHELLFISH, OR AQUATIC PLANTS INTO PUBLIC WATERS.
- STANDARD EMERGENCY CONDITION FOR THE DISCOVERY OF THREATENED AND ENDANGERED SPECIES; AND
- STANDARD EMERGENCY CONDITION FOR THE DISCOVERY OF CULTURAL RESOURCES.

3. THIS PROJECT IS SUBJECT TO THE AMERICAN IRON AND STEEL (AIS) REQUIREMENTS OF SECTION 608 OF THE FEDERAL WATER POLLUTION CONTROL ACT (33 U.S.C. §1388). ALL IRON AND STEEL PRODUCTS FOR CONSTRUCTION, ALTERATION, MAINTENANCE, OR REPAIRS INCORPORATED IN THESE PLANS MUST BE PRODUCED IN THE UNITED STATES.

SANITARY SEWER NOTES

1. CONTRACTOR TO MAINTAIN CLEARANCE BETWEEN SANITARY AND WATER LINES PER TCEQ 217 AND 290 REQUIREMENTS. WATER LINES, INCLUDING SERVICE LEADS, SHALL CROSS OVER SANITARY SEWER LINES AND SERVICE LEADS UNLESS SPECIFICALLY SHOWN OTHERWISE. WHEN SEWER LINE CEMENT STABILIZED SAND (CSS) BACKFILL IS REQUIRED, IT SHALL BE INSTALLED FROM ONE QUARTER OF THE DIAMETER OF THE PIPE BELOW THE CENTERLINE OF THE PIPE TO ONE PIPE DIAMETER (BUT NOT LESS THAN 12 INCHES) ABOVE THE TOP OF THE PIPE. CSS TO BE TWO OR MORE 80 POUND BAGS OF CEMENT PER CUBIC YARD OF SAND.
2. PRIOR TO COMMENCING WORK IN AN AREA, THE CONTRACTOR SHALL VERIFY UPSTREAM AND DOWNSTREAM FLOWLINES, UNCOVER EXISTING UTILITIES AT ALL POINTS OF CROSSING TO DETERMINE IF ANY CONFLICTS EXIST WITH THE PROPOSED DESIGN, AND LOCATE ALL SERVICE CONNECTIONS.
3. CONTRACTOR TO VERIFY ALL PROPOSED SEWER FLOW LINES AND ANGLES PRIOR TO ORDERING MANHOLES. ANY COSTS ASSOCIATED WITH FAILURE TO VERIFY WILL BE BORNE BY THE CONTRACTOR.
4. ALL PROPOSED AND EXISTING SANITARY SEWER LINE FLOW LINES AND SLOPES ARE CALCULATED TO THE CENTER OF THE MANHOLE.
5. THE CONTRACTOR SHALL LAY PIPE UP TO BUT NOT THROUGH THE MANHOLES SHOWN BY THESE PLANS.
6. EXCEPT WHERE CLEARLY INDICATED OTHERWISE, MANHOLE RIMS SHALL BE PLACED AS FOLLOWS: RIMS IN PAVEMENT TO BE FLUSH WITH THE PAVEMENT ELEVATION AND SLOPE AND HAVE MACHINED RINGS AND COVERS TO GUARD AGAINST RATTLING AND BOUNCING UNDER TRAFFIC. RIMS ADJACENT TO PAVING AREAS SHALL BE SET 3" TO 6" ABOVE THE SURROUNDING FINISHED GRADE AFTER PAVING WITH SLOPED BACKFILL ADDED FOR STORM WATER TO DRAIN AWAY FROM MANHOLE RIM. RIMS IN UNMAINTAINED AREAS SHALL BE SET APPROXIMATELY 18" ABOVE FINISHED GRADE.
7. NO FIBERGLASS MANHOLES MAY BE USED FOR THIS PROJECT. CAST–IN–PLACE MANHOLES OR JUNCTION BOXES WILL ONLY BE ALLOWED WHERE SPECIFICALLY NOTED ON THE PLANS.
8. ALL MANHOLES MUST PASS A LEAKAGE TEST PER TCEQ 217.58 VIA HYDROSTATIC OR VACUUM TESTING TO DEMONSTRATE WATERTIGHTNESS.
9. THE CONTRACTOR SHALL INSTALL SEWER WARNING AND MANHOLE IDENTIFICATION SIGNS ON EACH SANITARY SEWER MANHOLE NOT PLACED IN PAVEMENT AREAS.
10. FOR MANHOLES LARGER THAN 48", THE TRANSITION SECTION TO BEGIN AFTER THE CONE AND A 24" RISER SECTION.
11. ALL SANITARY SEWER CLEAN–OUTS IN PAVEMENT SHALL BE TRAFFIC RATED.
12. ALL DUCTILE IRON PIPE AND FITTINGS SHALL BE WRAPPED WITH POLYETHYLENE FILM AND TAPED PRIOR TO BACKFILL. ALL DUCTILE IRON PIPE AND FITTINGS SUBJECT TO PARTIAL FLOW OF SANITARY SEWAGE SHALL BE LINED WITH PROTECTO 401 CERAMIC EPOXY OR OTHER MATERIAL RATED FOR SUCH SERVICE.
13. CONTRACTOR IS RESPONSIBLE FOR NOTIFYING THE PROPERTY OWNERS IN ADVANCE OF DISRUPTING SERVICE. ALL SEWER SERVICE LINES ARE TO BE INSTALLED BY OPEN CUT UNLESS NOTED.
14. SEWER MAINS SHOWN ON PRIVATE PROPERTY ARE TO BE COVERED BY EASEMENTS. THE CONTRACTOR SHALL VERIFY THAT THESE EASEMENTS HAVE BEEN OBTAINED PRIOR TO CONSTRUCTION.
15. PROPOSED PUBLIC UTILITY EASEMENTS ARE TO BE CLEARED OF TREES, BRUSH, AND DEBRIS TO THE LIMITS OF THE EASEMENT PRIOR TO COMMENCING CONSTRUCTION OF PROPOSED SEWER LINES.
16. CONTRACTOR TO PROTECT AND SECURE POWER POLES TO UTILITIES STANDARDS.
17. THIS PROJECT SHALL BE BUILT BY MEANS OF OPEN CUT EXCEPT AS NOTED IN THE PLANS. THE LOCATIONS OF BORE PITS SHOWN IN THE PLANS ARE FOR INFORMATIONAL PURPOSES AND ARE SHOWN IN AN APPROXIMATE WAY ONLY. IT IS THE CONTRACTOR'S RESPONSIBILITY TO DETERMINE THE ACTUAL LOCATIONS OF ALL BORE PITS IN THE FIELD, SUBJECT TO THE APPROVAL OF THE INSPECTOR OR ENGINEER.
18. EXISTING SANITARY SEWER LINES SHOW TO BE CLEANED, PLUGGED, AND ABANDONED, WILL REQUIRE THE CONTRACTOR TO JET FLUSH (1 PASS), REMOVE ALL CONTENTS BY VACUUM TRUCK OR PUMP, AND DISPOSE OF AT THE CITY WWTP (NO FEES). INSTALL A MINIMUM OF 4' OF GROUT INTO THE ENDS OF THE LINE.
19. EXISTING SANITARY SEWER LINES SHOWN TO BE CLEANED AND GROUT FILLED, WILL REQUIRE THE CONTRACTOR TO JET FLUSH AND REMOVE ALL CONTENTS BY VACUUM TRUCK OR PUMP AND DISPOSE OF AT THE CITY WWTP (NO FEES). THEN GROUT FILL ENTIRE LINE.
20. EXISTING SANITARY SEWER LINES SHOWN TO BE EXCAVATED AND REMOVED, OR EXISTING SANITARY SEWER LINES WITHIN THE LIMITS OF THE PROPOSED TRENCH, ARE TO BE REMOVED BY THE CONTRACTOR TO 12" BELOW EXISTING INVERT, NSP.
21. EXISTING MANHOLES SHOWN TO BE ABANDONED, WILL REQUIRE THE CONTRACTOR TO CLEAN AND THEN DEMOLISH TO 3' BELOW GRADE AND FILL WITH EXCAVATED MATERIAL, OR CEMENT STABILIZED SAND WHERE NOTED.
22. EXISTING MANHOLES SHOWN TO BE REMOVED AND REPLACED SHALL BE COMPLETELY REMOVED AND A NEW MANHOLE INSTALLED. EXISTING LATERAL LINES SHALL BE RE–CONNECTED WITH FERNCO ADAPTERS WITH CONCRETE COLLARS, NSP.

GENERAL NOTES FOR LIFT STATION

1. FINAL GRADE ALL AREAS OF THE SITE TO DRAIN AFTER COMPLETION OF ALL OTHER CONSTRUCTION ACTIVITIES. THOROUGHLY CLEAN THE SITE TO REMOVE ALL CONSTRUCTION DEBRIS SUCH AS CONCRETE RUBBLE, REBAR, ETC. HYDROMULCH ALL AREAS WHICH ARE DISTURBED DURING CONSTRUCTION.
2. ALL UNDERGROUND NUTS AND BOLTS MUST BE 304 STAINLESS STEEL. ALL ABOVEGROUND NUTS AND BOLTS MUST BE ZINC PLATEDSTEEL OR STAINLESS STEEL UNLESS OTHERWISE SPECIFIED OR NOTED.
3. PROVIDE ISOLATION JOINTS BETWEEN ALL PROPOSED SIDEWALKS AND ALL SLABS, STRUCTURES, AND PAVEMENTS. ALSO PROVIDE ISOLATION JOINTS WHERE PIPES PENETRATE CONCRETE SLABS OR PAVEMENT UNLESS OTHERWISE SHOWN ON THE DRAWINGS. ISOLATION JOINTS SHALL CONSIST OF ASPHALT IMPREGNATED FIBERBOARD AND JOINT SEALANT MATERIAL.
4. THE APPROXIMATE LOCATION OF EXISTING UTILITIES ARE GIVEN FOR REFERENCE ONLY. BEFORE COMMENCING THE WORK ON THIS CONTRACT, THE CONTRACTOR SHALL VERIFY BY FIELD INVESTIGATION THE ACTUAL LOCATIONS OF ALL UTILITY FACILITIES WITHIN AND ADJACENT TO THE LIMITS OF THE WORK THAT MAY BE AFFECTED BY THE WORK. CONFLICTS WHICH RESULT DUE TO THE NEGLIGENCE BY THE CONTRACTOR TO LOCATE, HORIZONTALLY AND VERTICALLY, EXISTING UTILITIES WHICH ARE SHOWN ON THE CONSTRUCTION DRAWINGS, OR WHICH THE CONTRACTOR HAS BEEN GIVEN NOTICE OF HAS KNOWLEDGE OF, SHALL BE THE SOLE RESPONSIBILITY OF THE CONTRACTOR. THE COST OF REMEDIAL WORK, REMOVAL OF PORTIONS OF THE WORK OR EXTENSIVE DESIGN CHANGES OCCASIONED BY THE FAILURE OF THE CONTRACTOR TO VERIFY THE LOCATION OF THE EXISTING UTILITIES AS DESCRIBED ABOVE SHALL BE BORNE BY THE CONTRACTOR.
5. CONTRACTOR SHALL BE RESPONSIBLE FOR OBTAINING ALL APPLICABLE CITY, COUNTY, STATE, AND FEDERAL PERMITS. CONTRACTOR TO OBTAIN ALL PERMITS REQUIRED BY REGULATION OF TEXAS FOR FLOOD PLAIN MANAGEMENT PRIOR TO STARTING CONSTRUCTION.
6. PROVIDE ALUMINUM SIGNS, WHICH CONTAIN INFORMATION PROVIDED BY THE CITY. SEE DETAIL.
7. PROVIDE IDENTIFICATION NUMBERS FOR EACH PUMP WHICH CORRESPOIND TO THE IDENTIFICATION NUMBER IN THE CONTROL PANEL. THESE NUMBERS SHALL BE LOCATED ON THE VERTICAL AND HORIZONTAL DISCHARGE PIPES OF THE PUMPS. THE NUMBERS SHALL BE AT LEAST FOUR INCHES (4").
8. ALL ITEMS IN THE WET WELL SHALL BE ACCESSIBLE FROM THE HATCH COVERS. CONTRACTOR TO CONFIRM SIZE AND LOCATION OF THE ACCESS HATCH OPENINGS PER HATCH AND PUMP MANUFACTURER'S REQUIREMENTS. MINIMUM SIZE SHOWN.
9. INSTALL CHECK VALVES SO THAT THE WEIGHTED LEVER POSITION IS APPROXIMATELY 45 DEGREES BELOW THE VALVE'S HORIZONTAL CENTER LINE IN THE CLOSED POSITION; AND APPROXIMATELY 45 DEGREES ABOVE THE VALVE'S HORIZONTAL CENTER LINE IN THE FULL OPEN POSITION.
10. CONTRACTOR SHALL COMPLY WITH O.S.H.A. REGULATIONS AND TEXAS STATE LAW CONCERNING TRENCH SAFETY SYSTEMS.
11. UNLESS OTHERWISE SHOWN ON THE CONSTRUCTION DRAWINGS, ALL THROUGH WALL PIP SHALL HAVE A WALL FLANGE. ALL PENETRATIONS SHALL BE CAST–IN–PLACE WITH STRUCTURAL CONCRETE OR GROUTED IN BLOCK–OUTS WITH WATERPROOF NON–SHRINK GROUT. ALL BLOCK–OUTS FOR THROUGH–WALL PIPING SHALL BE KEYED, UNLESS OTHERWISE NOTED.
12. ALL PUMP STATION AND FORCE MAIN HEADER PIPING SHALL BE DUCTILE IRON, CLASS 350 WITH A MINIMUM WORKING PRESSURE OF 150 PSI PLUS A SURGE PRESSURE OF 100 PSI AND PRESSURE TYPE JOINTS.
13. ALL SEWER LINES TO BE TESTED IN ACCORDANCE WITH THE CONTRACT SPECIFICATIONS. CONTRACTOR TO FURNISH TEST PLUGS AND RISERS. (NO SEPARATE PAY)
14. SANITARY FACILITY CLEARANCES TO POTABLE WATER FACILITIES SHALL FOLLOW THE LATEST RULES AND REGULATIONS OF THE TEXAS COMMISSION ON ENVIRONMENTAL QUALITY.
15. CONTRACTOR IS TO CONTACT DIG TESS AT 1 (800) DIG–TESS FOR LOCATION OF EXISTING FACILITIES THAT MAY NOT BE SHOWN ON THE PLANS AT LEAST 48 H OURS PRIOR TO COMMENCEMENT OF ANY CONSTRUCTION ACTIVITIES.
16. THE CONTRACTOR SHALL RETURN ALL EXISTING FACILITIES TO EXISTING OR BETTER CONDITION UNLESS OTHERWISE NOTED AT NO ADDITIONAL COST TO THE OWNER.
17. CONTRACTOR TO FOLLOW CONSTRUCTION DETAILS IF DRAWINGS DEVIATE FROM BCS UNIFIED STANDARDS.
18. CONTRACTOR TO NOTIFY ENGINEER 24 HOURS PRIOR TO EXCAVATION OF LIFT STATION WET WELL AND VALVE VAULT. A REPRESENTATIVE OF THE ENGINEER MUST BE ON SITE DURING EXCAVATION OF LIFT STATION WET WELL AND VALVE VAULT.

PACKAGE WWTP NOTES

GENERAL:

THE MANUFACTURER SHALL FURNISH ONE CONVENTIONAL ACTIVATED SLUDGE TREATMENT SYSTEM WITH NITRIFICATION INCLUDING ALL NECESSARY EQUIPMENT REQUIRED TO TREAT THE FOLLOWING IN ACCORDANCE WITH TCEQ 217 RULES:
- FLOW: 100,000 GPD WITH 4 PEAK FACTOR
- INFLUENT: 250 MG/L BOD5 AND TSS
- EFFLUENT: 10 MG/L BOD5, 15 MG/L TSS, 3 MG/L NH3N, 4 MG/L DO
- MODE: COMPLETE MIX

STRUCTURE:

THE PLANT TO CONSIST OF STEEL TANKAGE DIVIDED INTO ZONES. STEEL PLATE AND SHAPES SHALL BE STRUCTURAL GRADE A–36, 1/4" MINIMUM, AND SHALL BE JOINED BY ELECTRIC ARC WELDING. WHERE REQUIRED FOR STRENGTH OR LEAK PROOFING, THE WELD SHALL BE CONTINUOUS AND WATERTIGHT. TANKS SHALL HAVE APPROPRIATELY SIZED EAVE ANGLES, EXTERIOR SUPPORT ANGLES AND BRACING. ALL FABRICATION AND ERECTION SHALL CONFORM TO APPROPRIATE REQUIREMENTS OF AISC. THE FOLLOWING MINIMUM DIMENSIONS ARE PROPOSED BUT MAY VARY BY MANUFACTURER.

AERATION/DIGESTER TANKS:

THE RECTANGULAR AERATION/DIGESTER TANKS SHALL HAVE THE FOLLOWING MINIMUMS:
- TANK WIDTH: 12 FEET
- TANK HEIGHT: 12 FEET
- OPERATING WATER DEPTH: 10 FEET 6 INCHES.
- AERATION TANK LENGTH: 57 FEET
- AERATION TANK VOLUME: 7,182 CUBIC FEET
- DIGESTER TANK LENGTH: 39 FEET
- DIGESTER VOLUME: 4,914 CUBIC FEET

EACH TANK SHALL HAVE SS AERATION DIFFUSER DROPLINES TO PROVIDE AIR FOR MIXING AND AERATION.

AERATION CHAMBER TO HAVE GALVANIZED MANUAL BAR SCREEN WITH DRIP PLATE AND HAVE ADJUSTABLE WEIR FOR AERATION AND FOR RECIRCULATION BACK TO THE LIFT STATION.

DIGESTER TANK TO HAVE SUPERNATANT DECANT ASSEMBLY WITH SWIVEL PIPE

CLARIFIER

ONE CIRCULAR, FLAT–BOTTOMED TANK TO BE PROVIDED WITH CENTER INLET AND PERIPHERAL DISCHARGE WITH THE FOLLOWING MINIMUMS:
- INSIDE DIAMETER: 24 FEET
- TANK HEIGHT: 12 FEET – 6 INCHES
- OPERATING WATER DEPTH: 11 FEET – 6 INCHES
- SIDE WATER DEPTH: 10 FEET MIN. (BASED ON THE TOP OF GROUT AT OUTSIDE OF TANK TO OPERATING WATER LEVEL).
- INFLUENT–LOADING WELL OF 5' DIAMETER BY 4' TALL BY 1/4" GALVANIZED SHALL BE PROVIDED TO DISSIPATE INFLUENT VELOCITY AND PREVENT SHORT–CIRCUITING.

A LOADING PIPE SHALL BE INSTALLED FROM THE AERATION ZONE TO THE LOADING WELL. THE MANUFACTURER SHALL FURNISH A SHEAR GATE ON THE INLET TO THE LOADING PIPE TO ALLOW DRAINING OF CLARIFIER FOR SERVICE WITHOUT DRAINING THE AERATION TANK.

THE BOTTOM OF THE CLARIFIER SHALL BE SLOPED WITH NON–SHRINK GROUT CONFORMING TO A 1 TO 24 SLOPE. THE GENERAL CONTRACTOR SHALL INSTALL THE GROUT USING THE COLLECTOR AS A GUIDE FOR FINAL FINISHING.

A MECHANICAL SLUDGE AND SCUM COLLECTOR TO BE PROVIDED. THE COLLECTOR ARMS SHALL BE DRIVEN BY A TRIPLE REDUCTION GEAR SYSTEM. THE SYSTEM SHALL CONSIST OF A SINGLE REDUCTION WORM GEAR DRIVE WITH A FLANGE–MOUNTED MOTOR, CLUTCH WITH ADJUSTABLE SPRING–LOADED ADJUSTMENT, AND PLANETARY MAIN GEAR DRIVE.

THE OUTPUT SHAFT OF THE MAIN GEAR DRIVE REQUIRING NO EXTERNAL BEARINGS SHALL SUPPORT THE ENTIRE COLLECTION ASSEMBLY.

THE GEAR DRIVE SHALL BE EQUIPPED WITH A "ZERO SPEED" SENSOR TO AUTOMATICALLY ILLUMINATE AN ALARM LIGHT SHOULD THE DRIVE CEASE TO ROTATE FOR ANY REASON.

SCUM COLLECTION SHALL BE VIA SKIMMER ARM WITH FLEXIBLE WIPER WHICH DEPOSITS SCUM IN A FULL WIDTH COLLECTION BOX WITH BENCH FOR REMOVAL BY AIRLIFT PUMP.

SLUDGE COLLECTION SHALL BE VIA ADJUSTABLE STEEL SCRAPERS AT THE BOTTOM OF THE CLARIFIER. BLADES SHALL BE ATTACHED TO THE SUPPORT ARMS, ARRANGED TO CONVEY SETTLED SLUDGE TO A CENTER COLLECTION HOPPER. SLUDGE FROM THE HOPPER WILL BE AIR LIFTED TO THE AERATION ZONE IN THE NORMAL MODE.

CLARIFIED LIQUID SHALL PASS OVER AN ADJUSTABLE WEIR PLATE INTO THE GALVANIZED EFFLUENT TROUGH. THE WEIR SHALL BE 1/8" STAINLESS STEEL PLATE. A SCUM BAFFLE SHALL BE INSTALLED INSIDE THE WEIR PLATE.

AIRLIFT PUMPS FOR SLUDGE AND SCUM SHALL BE SIZED BY THE MANUFACTURER. RAS AND WAS PUMPS TO BE PROVIDED WITH A V–NOTCH WEIR BOX AND FLOW METER, SIEMENS SITRANS LF500 OR EQUAL.

GEAR DRIVES USED IN THIS SYSTEM SHALL BE COMMERCIAL DRIVES WITH PARTS LOCALLY AVAILABLE FROM PART DISTRIBUTORS. THE EQUIPMENT MANUFACTURER SHALL GUARANTEE THAT PARTS AND SERVICE ARE AVAILABLE WITHIN A 60–MILE RADIUS OF THE INSTALLATION.

ACCESS WALKWAY:

36" WIDE MINIMUM NON–SKID STAIRWAY AND WALKWAY SHALL BE PROVIDED FOR ACCESS TO THE CLARIFIER DRIVE UNIT. THE STRUCTURE SHALL BE ADEQUATE FOR CONCENTRATED LOADS AT THE DRIVE MECHANISM AS WELL AS LIVE AND DEAD ENCOUNTERED DURING NORMAL OPERATION (MINIMUM 150 POUNDS PER LINEAR FOOT LIVE LOAD). CONTINUOUS GALVANIZED HANDRAILS SHALL BE PROVIDED WITH 2 RAIL PLUS TOEPLATE, WALKWAY SURFACE SHALL BE 1X1/8" GALVANIZED BAR GRATE. STEPS TO BE GALVANIZED BAR GRATING WITH NOSING.

THE AERATION, DIGESTER AND CHLORINE CONTACT TANKS SHALL HAVE WALKWAYS MEETING THE SAME REQUIREMENTS FOR ACCESS AND MAINTENANCE OF SCREENS, AIR LINES, VALVES, CONTROLS, ETC.

AIR SUPPLY AND DISTRIBUTION:

BLOWERS AND MOTORS SHALL BE FURNISHED FULLY ASSEMBLED ON A COMMON STEEL BASE PLATE FOR INSTALLATION ON PAD NEXT TO TREATMENT PLANT TANK AS SHOWN. EACH BLOWER COMBINATION SHALL BE COMPLETE INLET FILTER SILENCER, PRESSURE RELIEF VALVE, AND FLEXIBLE PIPING CONNECTIONS. BLOWER DECIBEL RATING SHALL NOT EXCEED 80.
- 3 BLOWERS RATED AT 350 CFM EACH
- 20 HP 3600 RPM 3 PH/60HZ/(230/460) VOLT HORIZONTAL TEFC MOTORS.

AIR DISTRIBUTION ON THE PLANT SHALL BE VIA GALVANIZED STEEL PIPE. DIFFUSERS FOR PROCESS AIR SHALL BE CONNECTED TO THE MAIN AIR HEADER THROUGH REMOVABLE DROPLINES. DIFFUSION DEVICES SHALL BE 2" COARSE BUBBLE TYPE WITH A MINIMUM OXYGEN TRANSFER EFFICIENCY OF 5% AT 20 CFM. THE DIFFUSER MATERIAL SHALL BE 304 STAINLESS STEEL AND INERT. THE DROP PIPE SHALL CONSIST OF GALVANIZED SCHEDULE 40 STEEL PIPE WITH UNIONS, VALVES, TEE,ETC AND BE REMOVABLE BY ONE MAN WITHOUT THE USE OF HOISTS. DIFFUSER SUBMERGENCE SHALL BE 12" FROM THE TANK BOTTOM. DIFFUSERS SHALL BE OF THE SPARGER TYPE AND HAVE SIX AIR RELEASE SLOTS DESIGNED TO BE NON–FOULING AND SHALL INCLUDE DEFECTOR PLATE TO INCREASE EFFICIENCY. EACH DROP LINE SHALL INCLUDE CLEAN OUT TEE, WHICH WILL PERMIT "RODDING" FROM ABOVE TO CLEAR ANY BLOCKAGES.

PIPING:

ALL PIPING REQUIRED FOR THE PROCESS LOCATED INSIDE THE LIMITS OF THE PLANT STRUCTURE SHALL BE FURNISHED BY THE MANUFACTURER. PIPE STUB–OUTS SHALL BE PROVIDED TO THE EXTERIOR WALL FOR CONNECTION TO THE EXTERNAL PIPING:
- 6" INFLUENT
- 6" EFFLUENT
- EACH TANK TO HAVE 4" FLANGED DRAIN NOZZLE THAT EXTEND 12" BEYOND THE OUTER WALL WITH PLUG VALVE AND BLIND FLANGE.

AIRLIFT PUMPS SHALL BE SCHEDULE 40 GALVANIZED STEEL WITH STAINLESS STEEL AIR SUPPLY LINE, VALVES AND SUPPORTS.
- RETURN SLUDGE AIRLIFT
- SCUM DISCHARGE FROM CLARIFIER
- SWIVEL DECANT DISCHARGE FROM DIGESTER TO AERATION

ALL VALVE OPERATORS AND/OR AUTOMATIC CONTROLS SHALL BE ACCESSIBLE TO THE OPERATOR FROM THE WALKWAY AND/OR OUTSIDE WALL.

CHLORINATION/FLOW METERING SYSTEM:

THE RECTANGULAR CHLORINE CONTACT TANK SHALL HAVE THE FOLLOWING MINIMUMS:
- TANK WIDTH: 8 FEET
- TANK HEIGHT: 8 FEET
- TANK LENGTH: 14 FEET
- WATER DEPTH, PEAK FLOW: 6.7 FEET
- VOLUME: 750 CUBIC FEET
- WEIR DEPTH, 22.5 DEGREE: 7.5" DESIGN FLOW, 13.25" PEAK FLOW

STEEL BAFFLES SHALL BE FURNISHED BY THE MANUFACTURER INSTALLED IN THE TANK TO PROMOTE PLUG FLOW.

FURNISH A DUPLEX FEEDER FOR CHLORINE. CHLORINE FEED SHALL BE LIQUID SODIUM HYPOCHLORITE USING SOLENOID DIAPHRAGM PUMPS AS MANUFACTURED BY LMI OR EQUAL. PUMPS SHALL OPERATE ON 120VAC POWER DRIVEN BY 4–20 MA SIGNAL PROVIDED BY FLOW METER TO PROVIDE CHEMICAL FEED PROPORTIONAL TO EFFLUENT FLOW. CHLORINE SOLUTION LINE TO BE 3/8" TUBING ENCASED IN ELECTRICAL CONDUIT RUN BY THE MANUFACTURER TO THE HEAD OF THE CHLORINE CONTACT TANK. LIQUID HYPOCHLORITE TANK TO BE INITIALLY FILLED PRIOR TO STARTUP.

EFFLUENT FLOW SHALL BE METERED USING ULTRASONIC LEVEL MEASUREMENT OVER A V–NOTCH WEIR. FLOW METER TO BE SITRANS LUT430 BY SIEMENS, INC. OR EQUAL AND BE CAPABLE OF DISPLAYING FLOW IN GPM, PROVIDE FLOW TOTALIZING, 4–20 MA SIGNAL FOR DRIVING CHLORINE FEED PUMP, AND DATA LOGGING. FLOW METER TO BE MOUNTED TO THE BUILDING OR HANDRAIL AND HAVE A STAINLESS STEEL SUN SHIELD.

EQUIPMENT TO BE MOUNTED IN A PRE–WIRED INSULATED FIBERGLASS BUILDING MEETING ALL TCEQ REQUIREMENTS BY ASSOCIATED FIBERGLASS ENGINEERS OR EQUAL AND HAVE THE FOLLOWING MINIMUM DIMENSIONS:
- 48" X 48" X 84"

PROVIDE PORTABLE EMERGENCY EYE WASH STATION ATTACHED TO THE WALL OF BUILDING, HONEYWELL 320004620000 OR EQUAL.

NPW SYSTEM:

NO NPW SYSTEM TO BE PROVIDED.

ELECTRICAL:

THE MANUFACTURER SHALL PROVIDE THE CONTROLS FOR THE BLOWERS WITH SOFT STARTS, CLARIFIER DRIVE, OVERLOAD DEVICE, SCUM SOLENOID CONTROL, AND NPW SYSTEM IF PROVIDED. THESE CONTROLS SHALL BE ENCLOSED IN NEMA 3R PANELS THAT WILL BE MOUNTED BY THE MANUFACTURER.

CORROSION PROTECTION:

ALL STEEL ITEMS NOT WELDED TO THE TANK SHALL BE HOT DIP GALVANIZED OR STAINLESS STEEL.

FABRICATED STEEL ITEMS NOT GALVANIZED OR PLATED WILL BE FINISH PAINTED WITH COAL TAR POLYURETHANE, "INDURATAR, MOISTURE CURE PAINT" SPECIFICALLY DESIGNED FOR SEWAGE TREATMENT PLANT SERVICE BY INDURON.
- INTERIOR: NEAR WHITE BLAST, 2 COATS AT 14–16 DFT TOTAL
- EXTERIOR: COMMERCIAL BLAST, 2 COATS AT 14–16 DFT TOTAL
- COLOR: BLACK

ANY PAINTED OR FINISHED SURFACES DAMAGED DURING INSTALLATION SHALL BE RE–COATED.

STARTUP:

ALL BASINS SHALL BE INITIALLY FILLED WITH UNCONTAMINATED WATER PRIOR TO SEWAGE ADDITION. THE MANUFACTURER SHALL PROVIDE STARTUP AND TRAINING FOR ALL COMPONENTS. ANY SEEDING/FEEDING OF THE PLANT SHALL BE THE RESPONSIBILITY OF THE OPERATOR.

APPROVED MANUFACTURERS:

ALL EQUIPMENT TO BE FURNISHED BY A SINGLE MANUFACTURER REGULARLY ENGAGED IN PRODUCTION OF THIS TYPE EQUIPMENT. THE MANUFACTURER SHALL BE SOLELY RESPONSIBLE FOR INTEGRATING ALL COMPONENTS INTO A WORKING SYSTEM AND SHALL BE RESPONSIBLE FOR STARTUP AND WARRANTY. APPROVED MANUFACTURES ARE AS FOLLOWS. EQUIPMENT OF EQUAL DESIGN BY OTHER MANUFACTURERS MAY BE OFFERED FOR REVIEW PRIOR TO BIDDING.
- SOUTHWEST FLUID PRODUCTS, INC.
- AUC GROUP

LOCATION AND ELEVATION OF EXISTING IMPROVEMENTS SHOWN HEREIN ARE PROVIDED BY OTHERS. CONTRACTOR SHALL FIELD VERIFY LOCATION AND ELEVATION OF EXISTING UTILITIES AT ALL CROSSINGS AND CONNECTION POINTS PRIOR TO ANY TRENCHING OR EXCAVATION OPERATIONS. ANY DISCREPANCIES BETWEEN THESE PLANS AND ACTUAL FIELD CONDITIONS SHALL BE IMMEDIATELY REPORTED TO THE ENGINEER.

CONTRACTOR SHALL USE CAUTION DURING CONSTRUCTION IN THE VICINITY OF ALL OVERHEAD ELECTRIC. CONTRACTOR SHALL COMPLY WITH ALL LOCAL, STATE, AND FEDERAL REQUIREMENTS IN REGARDS TO CLEARANCES AND CONSTRUCTION ACTIVITIES.

Texas 811 Know what's below. Call before you dig.

REV	DATE	COMMENTS
1	2/9/26	TWDB COMMENTS
0	12/3/25	ORIGINAL

PREPARED FOR:

CITY OF IOLA
P.O. BOX 84
IOLA, TEXAS 77861
TPDES WQ0016021–001

BLEYL ENGINEERING
PLANNING • DESIGN • MANAGEMENT
1722 Broadmoor, Suite 210, Bryan Tx 77802
Texas Firm Registration No. F-678
Tel. 979-268-1125 Fax 979-260-3849
www.bleylengineering.com
AUSTIN BRYAN CONROE HOUSTON

NOTES

CITY OF IOLA
0.100 MGD WASTEWATER
TREATMENT PLANT
TWDB CWSRF PROJECT NO. 10422
GLO PROJECT NO. 24–065–165–F080

STATE OF TEXAS
STEVE E. DUNCAN
83252
LICENSED
PROFESSIONAL ENGINEER
2/9/2026

DESIGN: SED	
CAD: JDR	RVW: SED
PROJECT NO: 12693	
SHEET: C2	

SDUNCAN 2/11/2026 7:33:46 AM
Z:\12600\12693 IOLA–TWDB WASTEWATER SYSTEM\04 CAD\CD–12693\WWTP PROJECT\1–3 COVER & NOTES.DWG

BLEYL ENGINEERING

ORIGINAL LAYOUT SIZE – 22X34

TCEQ ORGANIZED SEWAGE COLLECTION SYSTEM GENERAL CONSTRUCTION NOTES

TCEQ–0596 (Rev. July 15, 2015)

1. THIS ORGANIZED SEWAGE COLLECTION SYSTEM (SCS) MUST BE CONSTRUCTED IN ACCORDANCE WITH 30 TEXAS ADMINISTRATIVE CODE (TAC) §213.5(C), THE TEXAS COMMISSION ON ENVIRONMENTAL QUALITY'S (TCEQ) EDWARDS AQUIFER RULES AND ANY LOCAL GOVERNMENT STANDARD SPECIFICATIONS.
2. ALL CONTRACTORS CONDUCTING REGULATED ACTIVITIES ASSOCIATED WITH THIS PROPOSED REGULATED PROJECT MUST BE PROVIDED WITH COPIES OF THE SCS PLAN AND THE TCEQ LETTER INDICATING THE SPECIFIC CONDITIONS OF ITS APPROVAL. DURING THE COURSE OF THESE REGULATED ACTIVITIES, THE CONTRACTORS MUST BE REQUIRED TO KEEP ON–SITE COPIES OF THE PLAN AND THE APPROVAL LETTER. A WRITTEN NOTICE OF CONSTRUCTION MUST BE SUBMITTED TO THE PRESIDING TCEQ REGIONAL OFFICE AT LEAST 48 HOURS PRIOR TO THE START OF ANY REGULATED ACTIVITIES. THIS NOTICE MUST INCLUDE:
   - THE NAME OF THE APPROVED PROJECT;
   - THE ACTIVITY START DATE; AND
   - THE CONTACT INFORMATION OF THE PRIME CONTRACTOR.
4. ANY MODIFICATION TO THE ACTIVITIES DESCRIBED IN THE REFERENCED SCS APPLICATION FOLLOWING THE DATE OF APPROVAL MAY REQUIRE THE SUBMITTAL OF AN SCS APPLICATION TO MODIFY THIS APPROVAL, INCLUDING THE PAYMENT OF APPROPRIATE FEES AND ALL INFORMATION NECESSARY FOR ITS REVIEW AND APPROVAL.
5. PRIOR TO BEGINNING ANY CONSTRUCTION ACTIVITY, ALL TEMPORARY EROSION AND SEDIMENTATION (E&S) CONTROL MEASURES MUST BE PROPERLY INSTALLED AND MAINTAINED IN ACCORDANCE WITH THE MANUFACTURERS SPECIFICATIONS. THESE CONTROLS MUST REMAIN IN PLACE UNTIL THE DISTURBED AREAS HAVE BEEN PERMANENTLY STABILIZED.
6. IF ANY SENSITIVE FEATURES ARE DISCOVERED DURING THE WASTEWATER LINE TRENCHING ACTIVITIES, ALL REGULATED ACTIVITIES NEAR THE SENSITIVE FEATURE MUST BE SUSPENDED IMMEDIATELY. THE APPLICANT MUST IMMEDIATELY NOTIFY THE APPROPRIATE REGIONAL OFFICE OF THE TCEQ OF THE FEATURE DISCOVERED. A GEOLOGIST'S ASSESSMENT OF THE LOCATION AND EXTENT OF THE FEATURE DISCOVERED MUST BE REPORTED TO THAT REGIONAL OFFICE IN WRITING AND THE APPLICANT MUST SUBMIT A PLAN FOR ENSURING THE STRUCTURAL INTEGRITY OF THE SEWER LINE OR FOR MODIFYING THE PROPOSED COLLECTION SYSTEM ALIGNMENT AROUND THE FEATURE. THE REGULATED ACTIVITIES NEAR THE SENSITIVE FEATURE MAY NOT PROCEED UNTIL THE EXECUTIVE DIRECTOR HAS REVIEWED AND APPROVED THE METHODS PROPOSED TO PROTECT THE SENSITIVE FEATURE AND THE EDWARDS AQUIFER FROM ANY POTENTIALLY ADVERSE IMPACTS TO WATER QUALITY WHILE MAINTAINING THE STRUCTURAL INTEGRITY OF THE LINE.
7. SEWER LINES LOCATED WITHIN OR CROSSING THE 5–YEAR FLOODPLAIN OF A DRAINAGE WAY WILL BE PROTECTED FROM INUNDATION AND STREAM VELOCITIES WHICH COULD CAUSE EROSION AND SCOURING OF BACKFILL. THE TRENCH MUST BE CAPPED WITH CONCRETE TO PREVENT SCOURING OF BACKFILL, OR THE SEWER LINES MUST BE ENCASED IN CONCRETE. ALL CONCRETE SHALL HAVE A MINIMUM THICKNESS OF 6 INCHES.
8. BLASTING PROCEDURES FOR PROTECTION OF EXISTING SEWER LINES AND OTHER UTILITIES WILL BE IN ACCORDANCE WITH THE NATIONAL FIRE PROTECTION ASSOCIATION CRITERIA. SAND IS NOT ALLOWED AS BEDDING OR BACKFILL IN TRENCHES THAT HAVE BEEN BLASTED. IF ANY EXISTING SEWER LINES ARE DAMAGED, THE LINES MUST BE REPAIRED AND RETESTED.
9. ALL MANHOLES CONSTRUCTED OR REHABILITATED ON THIS PROJECT MUST HAVE WATERTIGHT SIZE ON SIZE RESILIENT CONNECTORS ALLOWING FOR DIFFERENTIAL SETTLEMENT. IF MANHOLES ARE CONSTRUCTED WITHIN THE 100–YEAR FLOODPLAIN, THE COVER MUST HAVE A GASKET AND BE BOLTED TO THE RING. WHERE GASKETED MANHOLE COVERS ARE REQUIRED FOR MORE THAN THREE MANHOLES IN SEQUENCE OR FOR MORE THAN 1500 FEET, ALTERNATE MEANS OF VENTING WILL BE PROVIDED. BRICKS ARE NOT AN ACCEPTABLE CONSTRUCTION MATERIAL FOR ANY PORTION OF THE MANHOLE. THE DIAMETER OF THE MANHOLES MUST BE A MINIMUM OF FOUR FEET AND THE MANHOLE FOR ENTRY MUST HAVE A MINIMUM CLEAR OPENING DIAMETER OF 30 INCHES. THESE DIMENSIONS AND OTHER DETAILS SHOWING COMPLIANCE WITH THE COMMISSION'S RULES CONCERNING MANHOLES AND SEWER LINE/MANHOLE INVERTS DESCRIBED IN 30 TAC §217.55 ARE INCLUDED ON PLAN SHEET ___ OF ___. IT IS SUGGESTED THAT ENTRANCE INTO MANHOLES IN EXCESS OF FOUR FEET DEEP BE ACCOMPLISHED BY MEANS OF A PORTABLE LADDER. THE INCLUSION OF STEPS IN A MANHOLE IS PROHIBITED.
10. WHERE WATER LINES AND NEW SEWER LINE ARE INSTALLED WITH A SEPARATION DISTANCE CLOSER THAN NINE FEET (I.E., WATER LINES CROSSING WASTEWATER LINES, WATER LINES PARALLELING WASTEWATER LINES, OR WATER LINES NEXT TO MANHOLES) THE INSTALLATION MUST MEET THE REQUIREMENTS OF 30 TAC §217.53(D) (PIPE DESIGN) AND 30 TAC §290.44(E) (WATER DISTRIBUTION).
11. WHERE SEWERS LINES DEVIATE FROM STRAIGHT ALIGNMENT AND UNIFORM GRADE ALL CURVATURE OF SEWER PIPE MUST BE ACHIEVED BY THE FOLLOWING PROCEDURE WHICH IS RECOMMENDED BY THE PIPE MANUFACTURER:_____.

    IF PIPE FLEXURE IS PROPOSED, THE FOLLOWING METHOD OF PREVENTING DEFLECTION OF THE JOINT MUST BE USED _____.

    SPECIFIC CARE MUST BE TAKEN TO ENSURE THAT THE JOINT IS PLACED IN THE CENTER OF THE TRENCH AND PROPERLY BEDDED IN ACCORDANCE WITH 30 TAC §217.54.
12. NEW SEWAGE COLLECTION SYSTEM LINES MUST BE CONSTRUCTED WITH STUB OUTS FOR THE CONNECTION OF ANTICIPATED EXTENSIONS. THE LOCATION OF SUCH STUB OUTS MUST BE MARKED ON THE GROUND SUCH THAT THEIR LOCATION CAN BE EASILY DETERMINED AT THE TIME OF CONNECTION OF THE EXTENSIONS. SUCH STUB OUTS MUST BE MANUFACTURED WYES OR TEES THAT ARE COMPATIBLE IN SIZE AND MATERIAL WITH BOTH THE SEWER LINE AND THE EXTENSION. AT THE TIME OF ORIGINAL CONSTRUCTION, NEW STUB–OUTS MUST BE CONSTRUCTED SUFFICIENTLY TO EXTEND BEYOND THE END OF THE STREET PAVEMENT. ALL STUB–OUTS MUST BE SEALED WITH A MANUFACTURED CAP TO PREVENT LEAKAGE. EXTENSIONS THAT WERE NOT ANTICIPATED AT THE TIME OF ORIGINAL CONSTRUCTION OR THAT ARE TO BE CONNECTED TO AN EXISTING SEWER LINE NOT FURNISHED WITH STUB OUTS MUST BE CONNECTED USING A MANUFACTURED SADDLE AND IN ACCORDANCE WITH ACCEPTED PLUMBING TECHNIQUES.

    IF NO STUB–OUT IS PRESENT AN ALTERNATE METHOD OF JOINING LATERALS IS SHOWN IN THE DETAIL ON PLAN SHEET __ OF __. (FOR POTENTIAL FUTURE LATERALS). THE PRIVATE SERVICE LATERAL STUB–OUTS MUST BE INSTALLED AS SHOWN ON THE PLAN AND PROFILE SHEETS ON PLAN SHEET __ OF __ AND MARKED AFTER BACKFILLING AS SHOWN IN THE DETAIL ON PLAN SHEET __ OF __.
13. TRENCHING, BEDDING AND BACKFILL MUST CONFORM WITH 30 TAC §217.54. THE BEDDING AND BACKFILL FOR FLEXIBLE PIPE MUST COMPLY WITH THE STANDARDS OF ASTM D–2321, CLASSES IA, IB, II OR III. RIGID PIPE BEDDING MUST COMPLY WITH THE REQUIREMENTS OF ASTM C 12 (ANSI A 106.2) CLASSES A, B OR C.
14. SEWER LINES MUST BE TESTED FROM MANHOLE TO MANHOLE. WHEN A NEW SEWER LINE IS CONNECTED TO AN EXISTING STUB OR CLEAN–OUT, IT MUST BE TESTED FROM EXISTING MANHOLE TO NEW MANHOLE. IF A STUB OR CLEAN–OUT IS USED AT THE END OF THE PROPOSED SEWER LINE, NO PRIVATE SERVICE ATTACHMENTS MAY BE CONNECTED BETWEEN THE LAST MANHOLE AND THE CLEANOUT UNLESS IT CAN BE CERTIFIED AS CONFORMING WITH THE PROVISIONS OF 30 TAC §213.5(C)(3)(E).
15. ALL SEWER LINES MUST BE TESTED IN ACCORDANCE WITH 30 TAC §217.57. THE ENGINEER MUST RETAIN COPIES OF ALL TEST RESULTS WHICH MUST BE MADE AVAILABLE TO THE EXECUTIVE DIRECTOR UPON REQUEST. THE ENGINEER MUST CERTIFY IN WRITING THAT ALL WASTEWATER LINES HAVE PASSED ALL REQUIRED TESTING TO THE APPROPRIATE REGIONAL OFFICE WITHIN 30 DAYS OF TEST COMPLETION AND PRIOR TO USE OF THE NEW COLLECTION SYSTEM. TESTING METHOD WILL BE:

(a) FOR A COLLECTION SYSTEM PIPE THAT WILL TRANSPORT WASTEWATER BY GRAVITY FLOW, THE DESIGN MUST SPECIFY AN INFILTRATION AND EXFILTRATION TEST OR A LOW–PRESSURE AIR TEST. A TEST MUST CONFORM TO THE FOLLOWING REQUIREMENTS:

(1) LOW PRESSURE AIR TEST.

(A) A LOW PRESSURE AIR TEST MUST FOLLOW THE PROCEDURES DESCRIBED IN AMERICAN SOCIETY FOR TESTING AND MATERIALS (ASTM) C–828, ASTM C924, OR ASTM F–1417 OR OTHER PROCEDURE APPROVED BY THE EXECUTIVE DIRECTOR, EXCEPT AS TO TESTING TIMES AS REQUIRED IN TABLE C.3 IN SUBPARAGRAPH (C) OF THIS PARAGRAPH OR EQUATION C.3 IN SUBPARAGRAPH OF THIS PARAGRAPH. (B)(II) OF THIS PARAGRAPH.

(B) FOR SECTIONS OF COLLECTION SYSTEM PIPE LESS THAN 36 INCH AVERAGE INSIDE DIAMETER, THE FOLLOWING PROCEDURE MUST APPLY, UNLESS A PIPE IS TO BE TESTED AS REQUIRED BY PARAGRAPH (2) OF THIS SUBSECTION.

(i) A PIPE MUST BE PRESSURIZED TO 3.5 POUNDS PER SQUARE INCH (PSI) GREATER THAN THE PRESSURE EXERTED BY GROUNDWATER ABOVE THE PIPE.

(ii) ONCE THE PRESSURE IS STABILIZED, THE MINIMUM TIME ALLOWABLE FOR THE PRESSURE TO DROP FROM 3.5 PSI GAUGE TO 2.5 PSI GAUGE IS COMPUTED FROM THE FOLLOWING EQUATION:

EQUATION C.3 $$T = \frac{0.085 \times D \times K}{Q}$$

WHERE:

T = TIME FOR PRESSURE TO DROP 1.0 POUND PER SQUARE INCH GAUGE IN SECONDS

K = 0.000419 X D X L, BUT NOT LESS THAN 1.0

D = AVERAGE INSIDE PIPE DIAMETER IN INCHES

L = LENGTH OF LINE OF SAME SIZE BEING TESTED, IN FEET

Q = RATE OF LOSS, 0.0015 CUBIC FEET PER MINUTE PER SQUARE FOOT INTERNAL SURFACE

(C) SINCE A K VALUE OF LESS THAN 1.0 MAY NOT BE USED, THE MINIMUM TESTING TIME FOR EACH PIPE DIAMETER IS SHOWN IN THE FOLLOWING TABLE C.3:

PIPE DIAMETER (INCHES)	MINIMUM TIME (SECONDS)	MAXIMUM LENGTH FOR MINIMUM TIME (FEET)	TIME FOR LONGER LENGTH (SECONDS/FOOT)
6	340	398	0.855
8	454	298	1.520
10	567	239	2.374
12	680	199	3.419
15	850	159	5.342
18	1020	133	7.693
21	1190	114	10.471
24	1360	100	13.676
27	1530	88	17.309
30	1700	80	21.369
33	1870	72	25.856

(D) AN OWNER MAY STOP A TEST IF NO PRESSURE LOSS HAS OCCURRED DURING THE FIRST 25% OF THE CALCULATED TESTING TIME.

(E) IF ANY PRESSURE LOSS OR LEAKAGE HAS OCCURRED DURING THE FIRST 25% OF A TESTING PERIOD, THEN THE TEST MUST CONTINUE FOR THE ENTIRE TEST DURATION AS OUTLINED ABOVE OR UNTIL FAILURE.

(F) WASTEWATER COLLECTION SYSTEM PIPES WITH A 27 INCH OR LARGER AVERAGE INSIDE DIAMETER MAY BE AIR TESTED AT EACH JOINT INSTEAD OF FOLLOWING THE PROCEDURE OUTLINED IN THIS SECTION.

(G) A TESTING PROCEDURE FOR PIPE WITH AN INSIDE DIAMETER GREATER THAN 33 INCHES MUST BE APPROVED BY THE EXECUTIVE DIRECTOR.

(2) INFILTRATION/EXFILTRATION TEST.

(A) THE TOTAL EXFILTRATION, AS DETERMINED BY A HYDROSTATIC HEAD TEST, MUST NOT EXCEED 50 GALLONS PER INCH OF DIAMETER PER MILE OF PIPE PER 24 HOURS AT A MINIMUM TEST HEAD OF 2.0 FEET ABOVE THE CROWN OF A PIPE AT AN UPSTREAM MANHOLE.

(B) AN OWNER SHALL USE AN INFILTRATION TEST IN LIEU OF AN EXFILTRATION TEST WHEN PIPES ARE INSTALLED BELOW THE GROUNDWATER LEVEL.

(C) THE TOTAL EXFILTRATION, AS DETERMINED BY A HYDROSTATIC HEAD TEST, MUST NOT EXCEED 50 GALLONS PER INCH DIAMETER PER MILE OF PIPE PER 24 HOURS AT A MINIMUM TEST HEAD OF TWO FEET ABOVE THE CROWN OF A PIPE AT AN UPSTREAM MANHOLE, OR AT LEAST TWO FEET ABOVE EXISTING GROUNDWATER LEVEL, WHICHEVER IS GREATER.

(D) FOR CONSTRUCTION WITHIN A 25–YEAR FLOOD PLAIN, THE INFILTRATION OR EXFILTRATION MUST NOT EXCEED 10 GALLONS PER INCH DIAMETER PER MILE OF PIPE PER 24 HOURS AT THE SAME MINIMUM TEST HEAD AS IN SUBPARAGRAPH (C) OF THIS PARAGRAPH.

(E) IF THE QUANTITY OF INFILTRATION OR EXFILTRATION EXCEEDS THE MAXIMUM QUANTITY SPECIFIED, AN OWNER SHALL UNDERTAKE REMEDIAL ACTION IN ORDER TO REDUCE THE INFILTRATION OR EXFILTRATION TO AN AMOUNT WITHIN THE LIMITS SPECIFIED. AN OWNER SHALL RETEST A PIPE FOLLOWING A REMEDIATION ACTION.

(B) IF A GRAVITY COLLECTION PIPE IS COMPOSED OF FLEXIBLE PIPE, DEFLECTION TESTING IS ALSO REQUIRED. THE FOLLOWING PROCEDURES MUST BE FOLLOWED:

(1) FOR A COLLECTION PIPE WITH INSIDE DIAMETER LESS THAN 27 INCHES, DEFLECTION MEASUREMENT REQUIRES A RIGID MANDREL.

(A) MANDREL SIZING.

(i) A RIGID MANDREL MUST HAVE AN OUTSIDE DIAMETER (OD) NOT LESS THAN 95% OF THE BASE INSIDE DIAMETER (ID) OR AVERAGE ID OF A PIPE, AS SPECIFIED IN THE APPROPRIATE STANDARD BY THE ASTMS, AMERICAN WATER WORKS ASSOCIATION, UNI–BELL, OR AMERICAN NATIONAL STANDARDS INSTITUTE, OR ANY RELATED APPENDIX.

(ii) IF A MANDREL SIZING DIAMETER IS NOT SPECIFIED IN THE APPROPRIATE STANDARD, THE MANDREL MUST HAVE AN OD EQUAL TO 95% OF THE ID OF A PIPE. IN THIS CASE, THE ID OF THE PIPE, FOR THE PURPOSE OF DETERMINING THE OD OF THE MANDREL, MUST EQUAL BE THE AVERAGE OUTSIDE DIAMETER MINUS TWO MINIMUM WALL THICKNESSES FOR OD CONTROLLED PIPE AND THE AVERAGE INSIDE DIAMETER FOR ID CONTROLLED PIPE.

(iii) ALL DIMENSIONS MUST MEET THE APPROPRIATE STANDARD.

(B) MANDREL DESIGN.

(i) A RIGID MANDREL MUST BE CONSTRUCTED OF A METAL OR A RIGID PLASTIC MATERIAL THAT CAN WITHSTAND 200 PSI WITHOUT BEING DEFORMED.

(ii) A MANDREL MUST HAVE NINE OR MORE ODD NUMBER OF RUNNERS OR LEGS.

(iii) A BARREL SECTION LENGTH MUST EQUAL AT LEAST 75% OF THE INSIDE DIAMETER OF A PIPE.

(iv) EACH SIZE MANDREL MUST USE A SEPARATE PROVING RING.

(C) METHOD OPTIONS.

(i) AN ADJUSTABLE OR FLEXIBLE MANDREL IS PROHIBITED.

(ii) A TEST MAY NOT USE TELEVISION INSPECTION AS A SUBSTITUTE FOR A DEFLECTION TEST.

(iii) IF REQUESTED, THE EXECUTIVE DIRECTOR MAY APPROVE THE USE OF A DEFLECTOMETER OR A MANDREL WITH REMOVABLE LEGS OR RUNNERS ON A CASE–BY–CASE BASIS. FOR A GRAVITY COLLECTION SYSTEM PIPE WITH AN INSIDE DIAMETER 27 INCHES AND GREATER, OTHER TEST METHODS MAY BE USED TO DETERMINE VERTICAL DEFLECTION.

(2) A DEFLECTION TEST METHOD MUST BE ACCURATE TO WITHIN PLUS OR MINUS 0.2% DEFLECTION.

(3) AN OWNER SHALL NOT CONDUCT A DEFLECTION TEST UNTIL AT LEAST 30 DAYS AFTER THE FINAL BACKFILL.

(4) GRAVITY COLLECTION SYSTEM PIPE DEFLECTION MUST NOT EXCEED FIVE PERCENT (5%).

(5) IF A PIPE SECTION FAILS A DEFLECTION TEST, AN OWNER SHALL CORRECT THE PROBLEM AND CONDUCT A SECOND TEST AFTER THE FINAL BACKFILL HAS BEEN IN PLACE AT LEAST 30 DAYS.

16. ALL MANHOLES MUST BE TESTED TO MEET OR EXCEED THE REQUIREMENTS OF 30 TAC §217.58.

(A) ALL MANHOLES MUST PASS A LEAKAGE TEST.

(B) AN OWNER SHALL TEST EACH MANHOLE (AFTER ASSEMBLY AND BACKFILLING) FOR LEAKAGE, SEPARATE AND INDEPENDENT OF THE COLLECTION SYSTEM PIPES, BY HYDROSTATIC EXFILTRATION TESTING, VACUUM TESTING, OR OTHER METHOD APPROVED BY THE EXECUTIVE DIRECTOR.

(1) HYDROSTATIC TESTING.

(A) THE MAXIMUM LEAKAGE FOR HYDROSTATIC TESTING OR ANY ALTERNATIVE TEST METHODS IS 0.025 GALLONS PER FOOT DIAMETER PER FOOT OF MANHOLE DEPTH PER HOUR.

(B) TO PERFORM A HYDROSTATIC EXFILTRATION TEST, AN OWNER SHALL SEAL ALL WASTEWATER PIPES COMING INTO A MANHOLE WITH AN INTERNAL PIPE PLUG, FILL THE MANHOLE WITH WATER, AND MAINTAIN THE TEST FOR AT LEAST ONE HOUR.

(C) A TEST FOR CONCRETE MANHOLES MAY USE A 24–HOUR WETTING PERIOD BEFORE TESTING TO ALLOW SATURATION OF THE CONCRETE.

(2) VACUUM TESTING.

(A) TO PERFORM A VACUUM TEST, AN OWNER SHALL PLUG ALL LIFT HOLES AND EXTERIOR JOINTS WITH A NON–SHRINK GROUT AND PLUG ALL PIPES ENTERING A MANHOLE.

(B) NO GROUT MUST BE PLACED IN HORIZONTAL JOINTS BEFORE TESTING.

(C) STUB–OUTS, MANHOLE BOOTS, AND PIPE PLUGS MUST BE SECURED TO PREVENT MOVEMENT WHILE A VACUUM IS DRAWN.

(D) AN OWNER SHALL USE A MINIMUM 60 INCH/LB TORQUE WRENCH TO TIGHTEN THE EXTERNAL CLAMPS THAT SECURE A TEST COVER TO THE TOP OF A MANHOLE.

(E) A TEST HEAD MUST BE PLACED AT THE INSIDE OF THE TOP OF A CONE SECTION, AND THE SEAL INFLATED IN ACCORDANCE WITH THE MANUFACTURER'S RECOMMENDATIONS. THERE MUST BE A VACUUM OF 10 INCHES OF MERCURY INSIDE A MANHOLE TO PERFORM A VALID TEST.

(F) A TEST DOES NOT BEGIN UNTIL AFTER THE VACUUM PUMP IS OFF.

(G) A MANHOLE PASSES THE TEST IF AFTER 2.0 MINUTES AND WITH ALL VALVES CLOSED, THE VACUUM IS AT LEAST 9.0 INCHES OF MERCURY.

17. ALL PRIVATE SERVICE LATERALS MUST BE INSPECTED AND CERTIFIED IN ACCORDANCE WITH 30 TAC §213.5(C)(3)(I). AFTER INSTALLATION OF AND, PRIOR TO COVERING AND CONNECTING A PRIVATE SERVICE LATERAL TO AN EXISTING ORGANIZED SEWAGE COLLECTION SYSTEM, A TEXAS LICENSED PROFESSIONAL ENGINEER, TEXAS REGISTERED SANITARIAN, OR APPROPRIATE CITY INSPECTOR MUST VISUALLY INSPECT THE PRIVATE SERVICE LATERAL AND THE CONNECTION TO THE SEWAGE COLLECTION SYSTEM, AND CERTIFY THAT IT IS CONSTRUCTED IN CONFORMITY WITH THE APPLICABLE PROVISIONS OF THIS SECTION. THE OWNER OF THE COLLECTION SYSTEM MUST MAINTAIN SUCH CERTIFICATIONS FOR FIVE YEARS AND FORWARD COPIES TO THE APPROPRIATE REGIONAL OFFICE UPON REQUEST. CONNECTIONS MAY ONLY BE MADE TO AN APPROVED SEWAGE COLLECTION SYSTEM.

REV	DATE	COMMENTS
1	2/9/26	TWDB COMMENTS
0	12/3/25	ORIGINAL

PREPARED FOR:
CITY OF IOLA
P.O. BOX 84
IOLA, TEXAS 77861
TPDES WQ0016021–001

BLEYL ENGINEERING
PLANNING • DESIGN • MANAGEMENT
1722 Broadmoor, Suite 210, Bryan Tx. 77802
Texas Firm Registration No. F-678
Tel. 979-268-1125 Fax 979-260-3849
www.bleylengineering.com
AUSTIN BRYAN CONROE HOUSTON

TCEQ NOTES

CITY OF IOLA
0.100 MGD WASTEWATER TREATMENT PLANT
TWDB CWSRP PROJECT NO. 10422
GLO PROJECT NO. 24–065–165–F080

STATE OF TEXAS
STEVE E. DUNCAN
83252
LICENSED PROFESSIONAL ENGINEER
2/9/2026

DESIGN: SED
CAD: JDR | RVW: SED
PROJECT NO: 12693
SHEET: C3

SDUNCAN 2/11/2026 7:33:48 AM
Z:\12600\12693 IOLA–TWDB WASTEWATER SYSTEM\04 CAD\CD–12693\WWTP PROJECT\1–3 COVER & NOTES.DWG

ORIGINAL LAYOUT SIZE – 22X34

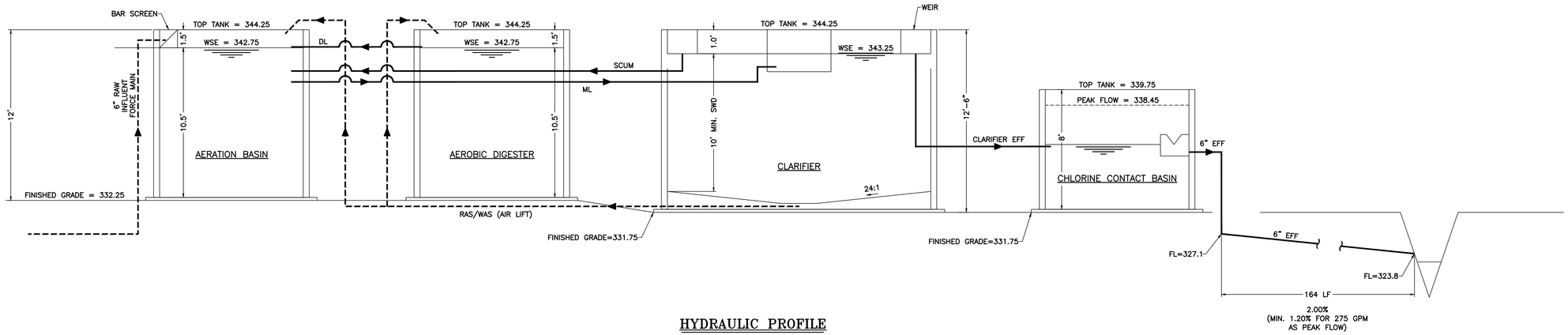

HYDRAULIC PROFILE

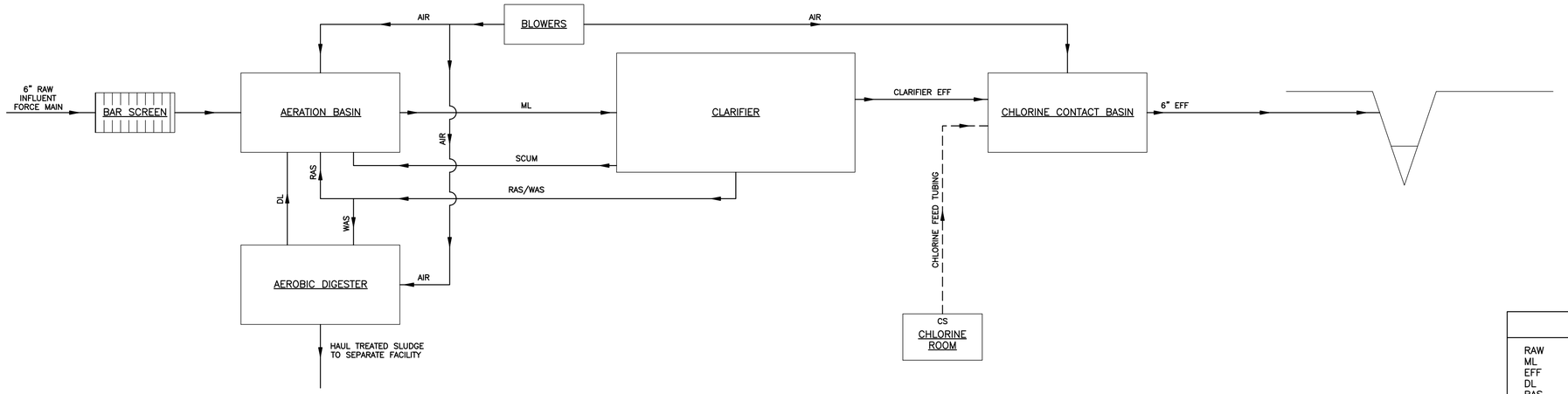

FLOW PROCESS DIAGRAM

LEGEND	
RAW	RAW SEWAGE
ML	MIXED LIQUOR
EFF	EFFLUENT
DL	DECANT LIQUOR
RAS	RETURN ACTIVATED SLUDGE
WAS	WASTE ACTIVATED SLUDGE
CS	CHLORINE SOLUTION
WSE	WATER SURFACE ELEVATION
FM	FORCE MAIN
EL	ELEVATION
FL	FLOW LINE
WWTP	WASTE WATER TREATMENT PLANT
MOD	MODIFIED
FM	FORCE MAIN
TOS	TOP OF SLAB
TOW	TOP OF WALL
DIP	DUCTILE IRON PIPE
HGL	HYDRAULIC GRADE LINE
EXIST	EXISTING
PROP	PROPOSED
PVC	POLYVINYL CHLORIDE – PIPE
HDPE	HIGH DENSITY POLYETHYLENE – PIPE

REV	DATE	COMMENTS
1	2/9/26	TWDB COMMENTS
0	12/3/25	ORIGINAL

PREPARED FOR:
CITY OF IOLA
P.O. BOX 84
IOLA, TEXAS 77861
TPDES WQ0016021-001

BLEYL ENGINEERING
PLANNING • DESIGN • MANAGEMENT
1722 Broadmoor, Suite 210, Bryan Tx. 77802
Texas Firm Registration No. F-678
Tel. 979-268-1125 Fax 979-260-3849
www.bleylengineering.com
AUSTIN BRYAN CONROE HOUSTON

HYDRAULIC PROFILE

CITY OF IOLA
0.100 MGD WASTEWATER TREATMENT PLANT
TWDB CWSRF PROJECT NO. 10422
GLO PROJECT NO. 24-065-165-F080

STATE OF TEXAS
STEVE E. DUNCAN
83252
LICENSED
PROFESSIONAL ENGINEER
2/9/2026

DESIGN: SED	
CAD: JDR	RVW: SED
PROJECT NO:	12693
SHEET: C4	

JRANSOM
2/11/2026 7:33:58 AM
Z:\12600\12693 IOLA-TWDB WASTEWATER SYSTEM\04 CAD\CD-12693\WWTP PROJECT\4 HYDRAULIC PROFILE.DWG

BLEYL ENGINEERING

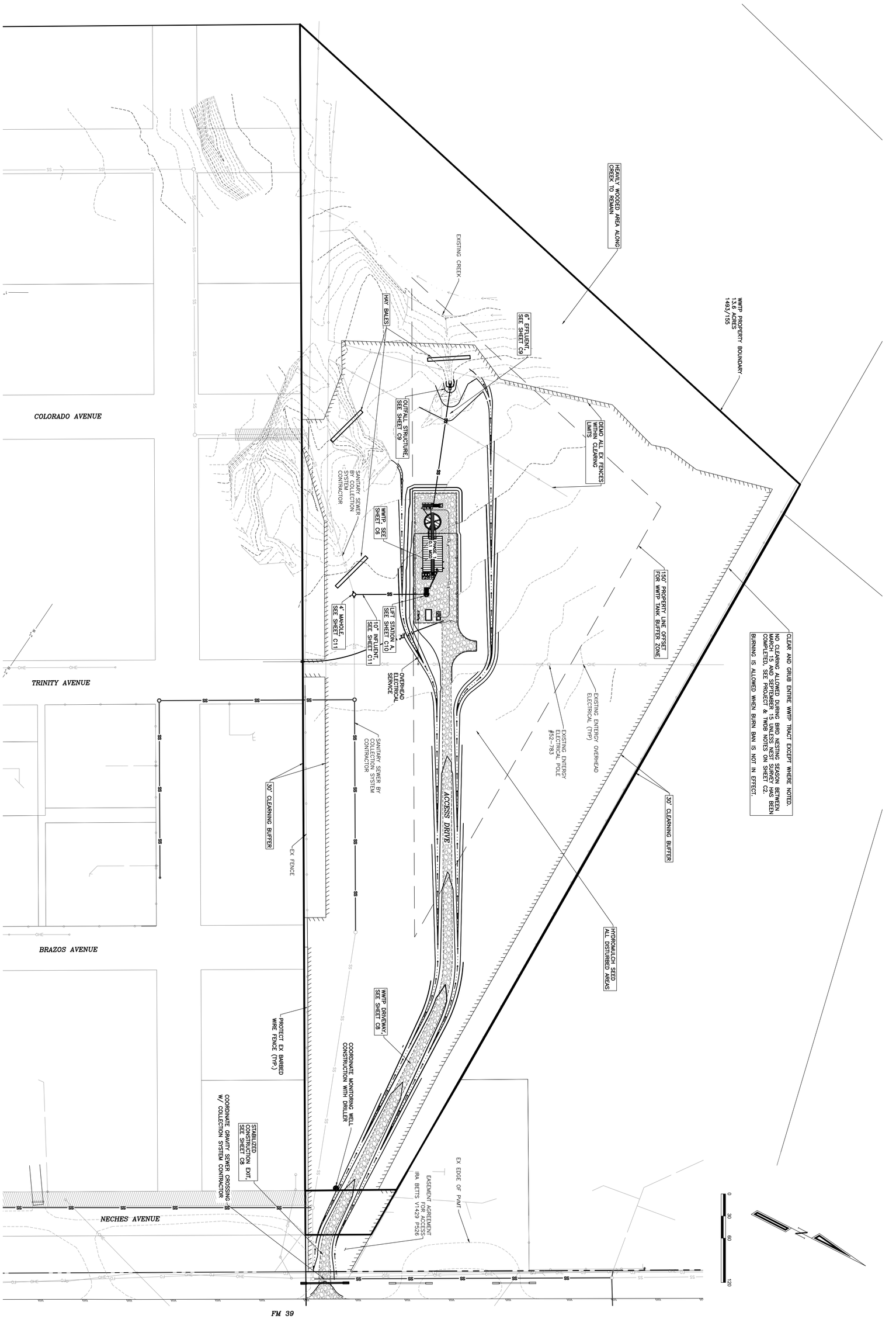

BLEYL ENGINEERING

DESIGN: SED	
CAD: JDR	RVW: SED
PROJECT NO: 12693	
SHEET: C5	

2/9/2026

OVERALL PLAN

CITY OF IOLA
0.100 MGD WASTEWATER TREATMENT PLANT
TWDB CWSRF PROJECT NO. 10422
GLO PROJECT NO. 24-065-165-F080

BLEYL ENGINEERING
PLANNING • DESIGN • MANAGEMENT
1722 Broadmoor, Suite 210, Bryan Tx 77802
Texas Firm Registration No. F-678
Tel. 979-268-1125 Fax 979-260-3849
www.bleylengineering.com
AUSTIN BRYAN CONROE HOUSTON

PREPARED FOR:
CITY OF IOLA
P.O. BOX 84
IOLA, TEXAS 77861
TPDES WQ0016021-001

REV	DATE	COMMENTS
1	2/9/26	TWDB COMMENTS
0	12/3/25	ORIGINAL

ORIGINAL LAYOUT SIZE – 22X34

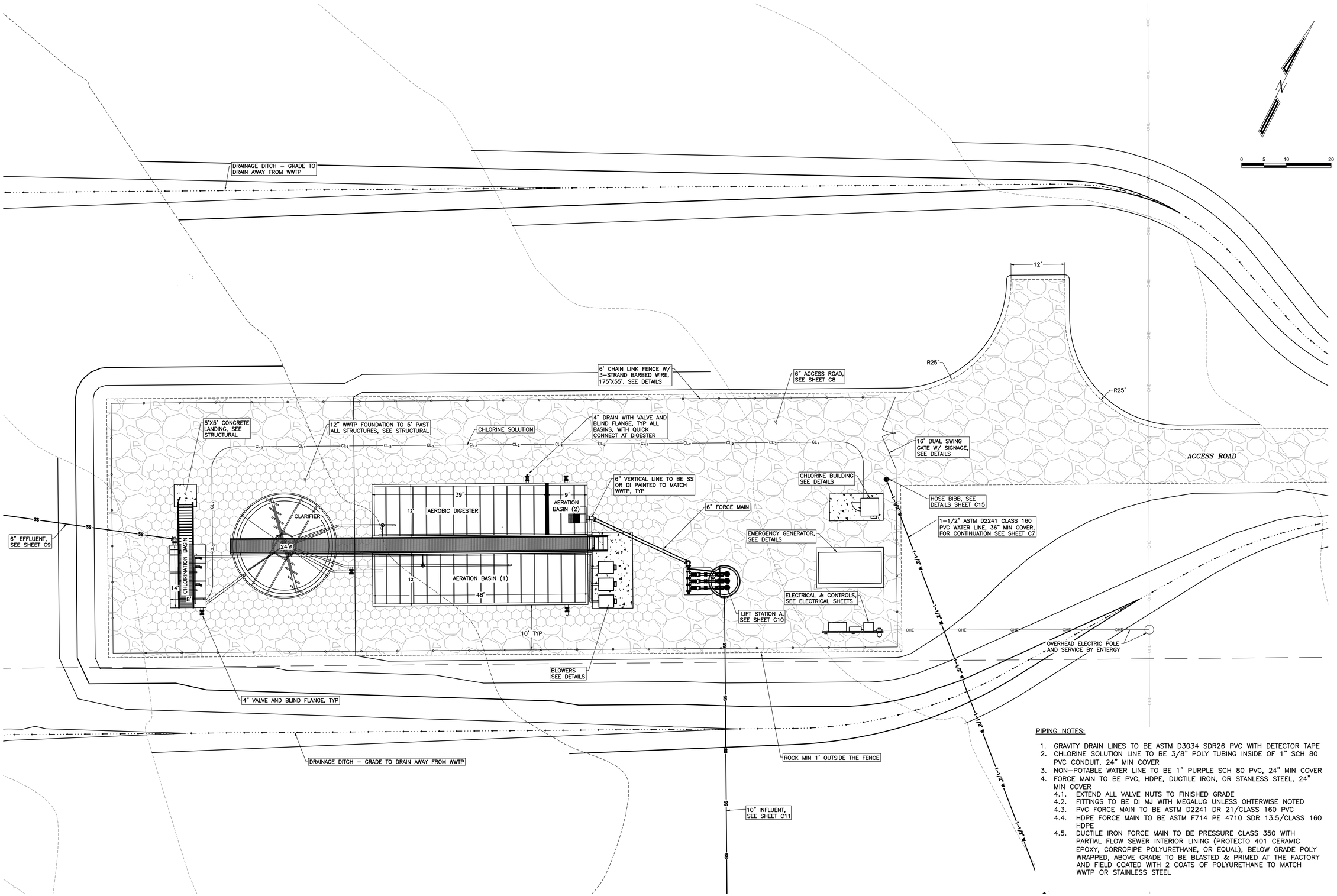

PIPING NOTES:

1. GRAVITY DRAIN LINES TO BE ASTM D3034 SDR26 PVC WITH DETECTOR TAPE
2. CHLORINE SOLUTION LINE TO BE 3/8" POLY TUBING INSIDE OF 1" SCH 80 PVC CONDUIT, 24" MIN COVER
3. NON–POTABLE WATER LINE TO BE 1" PURPLE SCH 80 PVC, 24" MIN COVER
4. FORCE MAIN TO BE PVC, HDPE, DUCTILE IRON, OR STANLESS STEEL, 24" MIN COVER
   - 4.1. EXTEND ALL VALVE NUTS TO FINISHED GRADE
   - 4.2. FITTINGS TO BE DI MJ WITH MEGALUG UNLESS OHTERWISE NOTED
   - 4.3. PVC FORCE MAIN TO BE ASTM D2241 DR 21/CLASS 160 PVC
   - 4.4. HDPE FORCE MAIN TO BE ASTM F714 PE 4710 SDR 13.5/CLASS 160 HDPE
   - 4.5. DUCTILE IRON FORCE MAIN TO BE PRESSURE CLASS 350 WITH PARTIAL FLOW SEWER INTERIOR LINING (PROTECTO 401 CERAMIC EPOXY, CORROPIPE POLYURETHANE, OR EQUAL), BELOW GRADE POLY WRAPPED, ABOVE GRADE TO BE BLASTED & PRIMED AT THE FACTORY AND FIELD COATED WITH 2 COATS OF POLYURETHANE TO MATCH WWTP OR STAINLESS STEEL

REV	DATE	COMMENTS
1	2/9/26	TWDB COMMENTS
0	12/3/25	ORIGINAL

PREPARED FOR:
CITY OF IOLA
P.O. BOX 84
IOLA, TEXAS 77861
TPDES WQ0016021–001

BLEYL ENGINEERING
PLANNING • DESIGN • MANAGEMENT
1722 Broadmoor, Suite 210, Bryan Tx. 77802
Texas Firm Registration No. F-678
Tel. 979-268-1125 Fax 979-260-3849
www.bleylengineering.com
AUSTIN BRYAN CONROE HOUSTON

SITE PLAN

CITY OF IOLA
0.100 MGD WASTEWATER TREATMENT PLANT
TWDB CWSRF PROJECT NO. 10422
GLO PROJECT NO. 24-065-165-F080

STATE OF TEXAS
STEVE E. DUNCAN
83252
PROFESSIONAL ENGINEER
LICENSED
2/9/2026

DESIGN: SED	
CAD: JDR	RVW: SED
PROJECT NO: 12693	
SHEET: C6	

Z:\12600\12693 IOLA–TWDB WASTEWATER SYSTEM\04 CAD\CD–12693\WWTP PROJECT\5–6 OVERALL & SITE PLAN.DWG 2/11/2026 7:34:59 AM ZVOTAW

ORIGINAL LAYOUT SIZE – 22X34

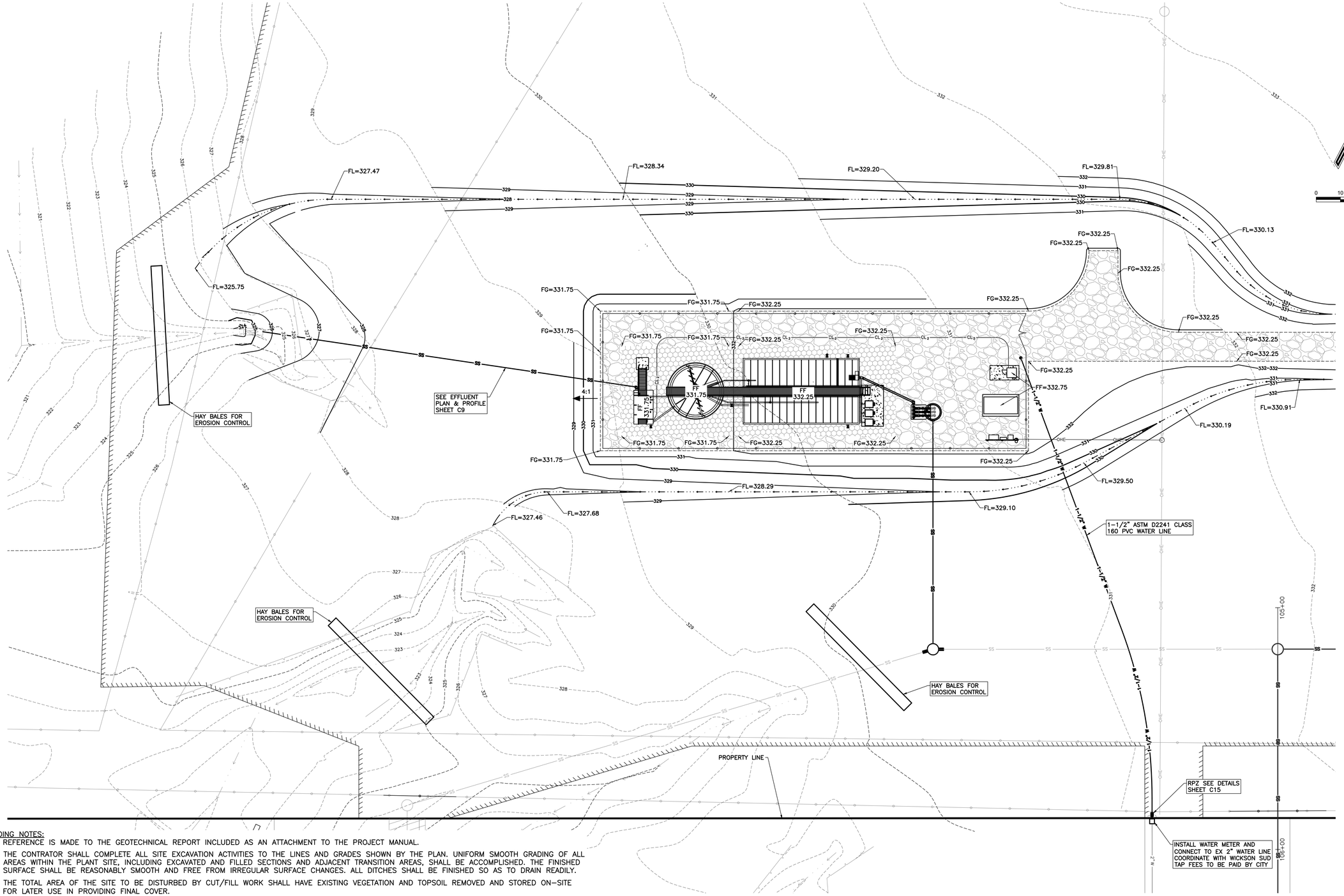

GRADING NOTES:

1. REFERENCE IS MADE TO THE GEOTECHNICAL REPORT INCLUDED AS AN ATTACHMENT TO THE PROJECT MANUAL.
2. THE CONTRATOR SHALL COMPLETE ALL SITE EXCAVATION ACTIVITIES TO THE LINES AND GRADES SHOWN BY THE PLAN. UNIFORM SMOOTH GRADING OF ALL AREAS WITHIN THE PLANT SITE, INCLUDING EXCAVATED AND FILLED SECTIONS AND ADJACENT TRANSITION AREAS, SHALL BE ACCOMPLISHED. THE FINISHED SURFACE SHALL BE REASONABLY SMOOTH AND FREE FROM IRREGULAR SURFACE CHANGES. ALL DITCHES SHALL BE FINISHED SO AS TO DRAIN READILY.
3. THE TOTAL AREA OF THE SITE TO BE DISTURBED BY CUT/FILL WORK SHALL HAVE EXISTING VEGETATION AND TOPSOIL REMOVED AND STORED ON–SITE FOR LATER USE IN PROVIDING FINAL COVER.
4. FILL AREAS SHALL BE MADE WITH MATERIALS LOCATED ON SITE. ROCK OR OTHER DELITERIOUS MATERIALS SHALL NOT BE USED. FOLLOIWNG PROOF ROLLING, ALL EXPOSED SUBGRADE SOILS TO RECIEVE FILL SHALL BE SCARIFIED TO A MINIMUM DEPTH OF 6–INCHES. THE SOIL SHALL BE UNIFORMLY SPREAD IN LAYERS NOT MORE THAN 8–INCHES IN DEPTH AND COMPACTED TO 95% STANDARD PROCTOR (D698) AT –2/+4% OF OPTIMUM MOISTURE.
5. THE ESTIMATED BALANCE FOR CUT/FILL VOLUME IS BELOW, UN–FACTORED. CONCRETE PADS AND CRUSHED ROCK VOLUMES WERE NOT REMOVED:
   - 5.1. CUT VOLUME = 1,020 CY
   - 5.2. FILL VOLUME = 1,050 CY
   - 5.3. ACCESS ROAD CRUSHED ROCK = 2,045 SY
   - 5.4. PLANT FOUNDATION CRUSHED ROCK = 470 SY
   - 5.5. CONCRETE PADS = 45 SY

REV	DATE	COMMENTS
1	2/9/26	TWDB COMMENTS
0	12/3/25	ORIGINAL

PREPARED FOR:
CITY OF IOLA
P.O. BOX 84
IOLA, TEXAS 77861
TPDES WQ0016021–001

BLEYL ENGINEERING
PLANNING • DESIGN • MANAGEMENT
1722 Broadmoor, Suite 210, Bryan Tx. 77802
Texas Firm Registration No. F-678
Tel. 979-268-1125 Fax 979-260-3849
www.bleylengineering.com
AUSTIN BRYAN CONROE HOUSTON

GRADING & EROSION 1

CITY OF IOLA
0.100 MGD WASTEWATER TREATMENT PLANT
TWDB CWSRF PROJECT NO. 10422
GLO PROJECT NO. 24–065–165–F080

STATE OF TEXAS
STEVE E. DUNCAN
83252
LICENSED PROFESSIONAL ENGINEER
2/9/2026

DESIGN: SED
CAD: JDR | RVW: SED
PROJECT NO: 12693
SHEET: C7

Z:\12600\12693 IOLA–TWDB WASTEWATER SYSTEM\04 CAD\CD–12693\WWTP PROJECT\7–8 GRADING.DWG
2/11/2026 7:35:51 AM
ZVOTAW

ORIGINAL LAYOUT SIZE – 22X34

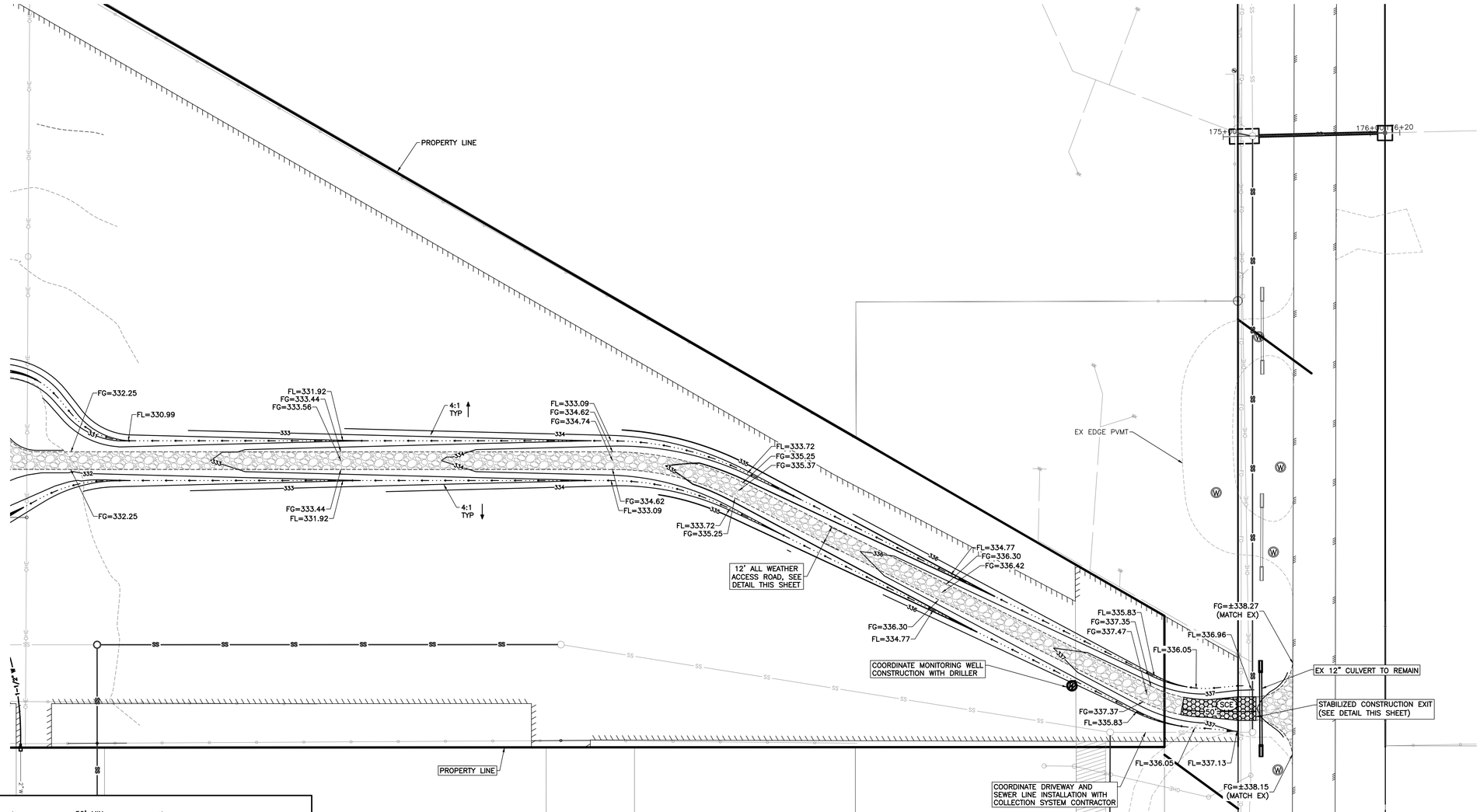

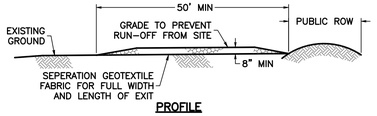

PROFILE

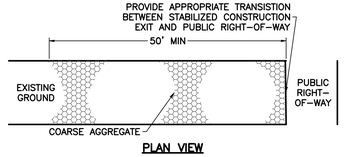

PLAN VIEW

NOTES:
1. LENGTH SHALL BE AS SHOWN ON THE CONSTRUCTION DRAWINGS, BUT NOT LESS THAN 50 FEET.
2. THICKNESS SHALL BE NOT LESS THAN 8 INCHES.
3. WIDTH SHALL BE NOT LESS THAN FULL WIDTH OF ALL POINTS OF INGRESS OR EGRESS.
4. STABILIZATION FOR OTHER AREAS SHALL HAVE THE SAME AGGREGATE THICKNESS AND WIDTH REQUIREMENTS AS THE STABILIZED CONSTRUCTION EXIT, UNLESS OTHERWISE SHOWN ON THE CONSTRUCTION DRAWINGS.
5. STABILIZED AREA MAY BE WIDENED OR LENGTHENED TO ACCOMODATE A TRUCK WASHING AREA. AN OUTLET SEDIMENT TRAP MUST BE PROVIDED FOR THE TRUCK WASHING AREA.
6. SEE SECTION 015513 – STABILIZED CONSTRUCTION EXIT.
7. STABILIZED CONSTRUCTION EXIT SHALL BE MAINTAINED FREE OF SEDIMENT FOR THE DURATION OF THE PROJECT.

SCE

STABILIZED CONSTRUCTION EXIT	
TERO–003	
SCALE: NTS	10/26/18

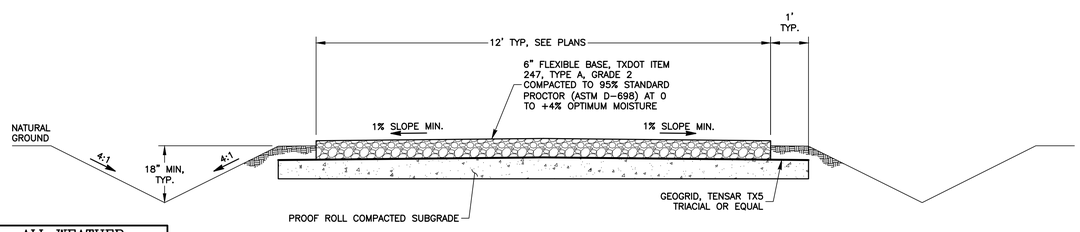

ALL WEATHER ACCESS ROAD	
SCALE: NTS	8/7/25

REV	DATE	COMMENTS
1	2/9/26	TWDB COMMENTS
0	12/3/25	ORIGINAL

PREPARED FOR:
CITY OF IOLA
P.O. BOX 84
IOLA, TEXAS 77861
TPDES WQ0016021–001

BLEYL ENGINEERING
PLANNING • DESIGN • MANAGEMENT
1722 Broadmoor, Suite 210, Bryan Tx. 77802
Texas Firm Registration No. F-678
Tel. 979-268-1125 Fax 979-260-3849
www.bleylengineering.com
AUSTIN BRYAN CONROE HOUSTON

GRADING & EROSION 2

CITY OF IOLA
0.100 MGD WASTEWATER TREATMENT PLANT

TWDB CWSRF PROJECT NO. 10422
GLO PROJECT NO. 24-065-165-F080

STATE OF TEXAS
STEVE E. DUNCAN
83252
LICENSED PROFESSIONAL ENGINEER
2/9/2026

DESIGN: SED	
CAD: JDR	RVW: SED
PROJECT NO:	12693
SHEET: C8	

ZVOTAW
Z:\12600\12693 IOLA-TWDB WASTEWATER SYSTEM\04 CAD\CD-12693\WWTP PROJECT\7-8 GRADING.DWG
2/11/2026 7:36:13 AM

ORIGINAL LAYOUT SIZE – 22X34

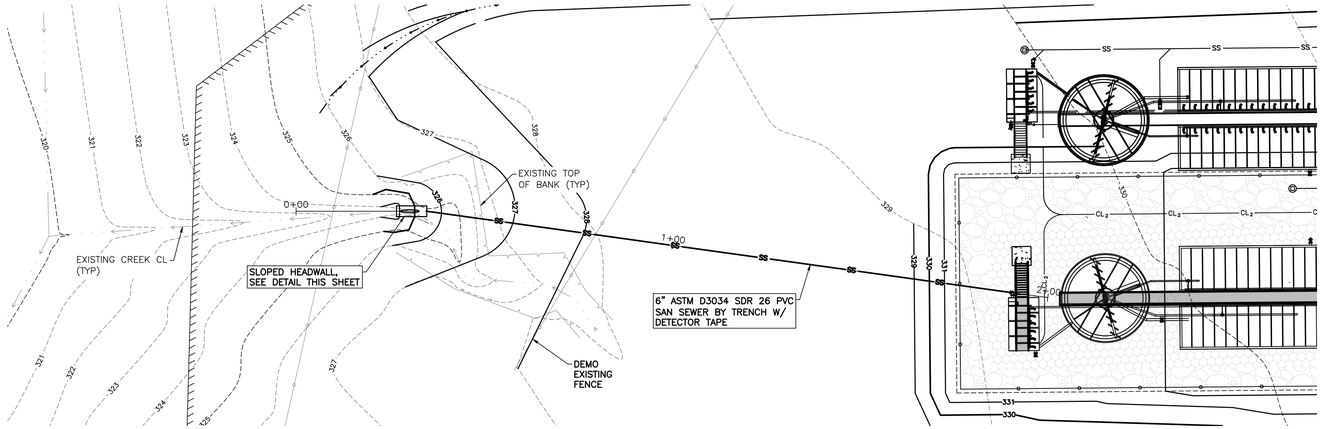

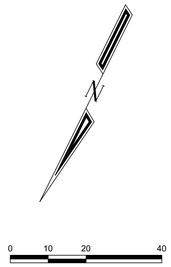

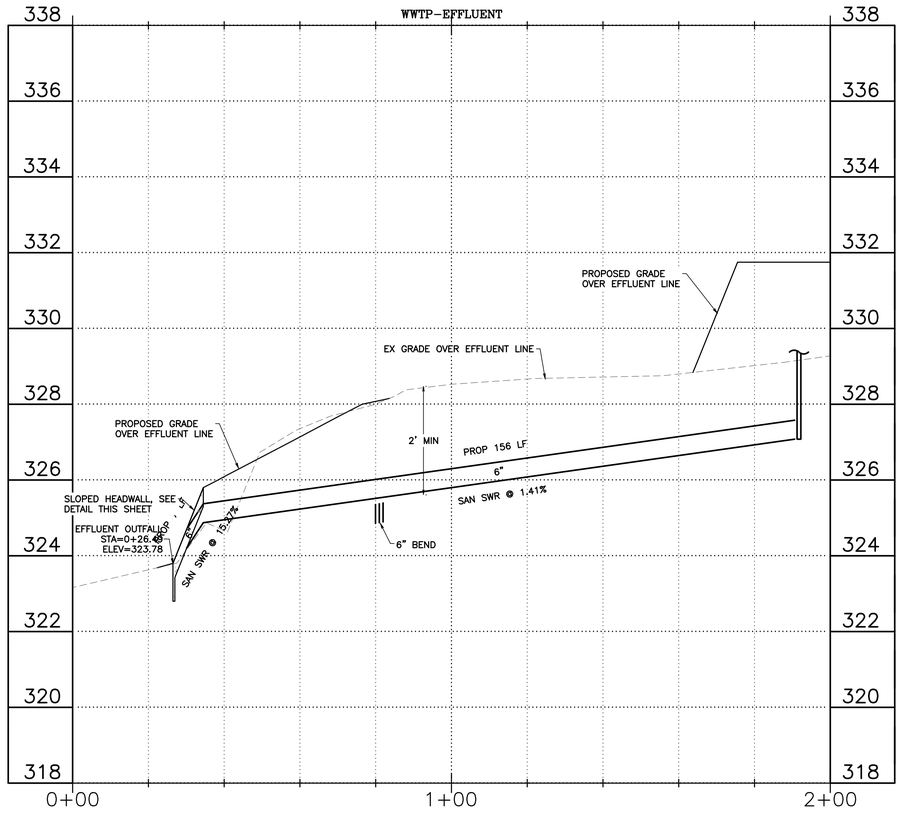

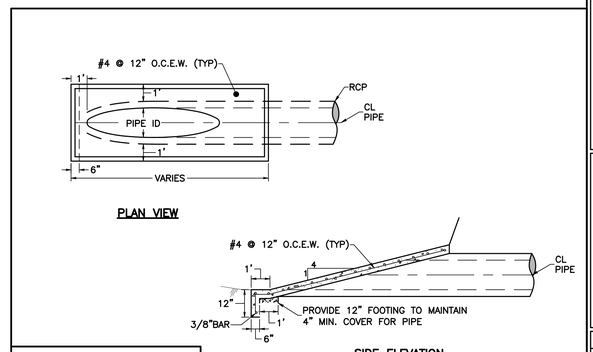

SLOPED HEADWALL

STM–401*

SCALE: NTS | 08/05/25

REV	DATE	COMMENTS
1	2/9/26	TWDB COMMENTS
0	12/3/25	ORIGINAL

PREPARED FOR:

CITY OF IOLA
P.O. BOX 84
IOLA, TEXAS 77861
TPDES WQ0016021–001

BLEYL ENGINEERING
PLANNING • DESIGN • MANAGEMENT
1722 Broadmoor, Suite 210, Bryan Tx. 77802
Texas Firm Registration No. F-678
Tel. 979-268-1125 Fax 979-260-3849
www.bleylengineering.com

BRYAN CONROE HOUSTON AUSTIN

EFFLUENT PLAN & PROFILE

CITY OF IOLA
0.100 MGD WASTEWATER TREATMENT PLANT
TWDB CWSRF PROJECT NO. 10422
GLO PROJECT NO. 24-065-165-F080

STATE OF TEXAS
STEVE E. DUNCAN
83252
LICENSED
PROFESSIONAL ENGINEER
2/9/2026

DESIGN: SED
CAD: JDR | RVW: SED
PROJECT NO: 12693
SHEET: C9

JRANSOM
2/11/2026 7:37:46 AM
Z:\12600\12693 IOLA–TWDB WASTEWATER SYSTEM\04 CAD\CD–12693\WWTP PROJECT\9 EFFLUENT P&P.DWG

ORIGINAL LAYOUT SIZE – 22X34

ALTERNATE BID:
FIBERGLASS PACKAGE LIFT STATION IN LIEU OF CONCRETE WET WELL, PUMPS, AND OTHER APPURTENANCES INCLUDED WITH A PACKAGE LIFT STATION

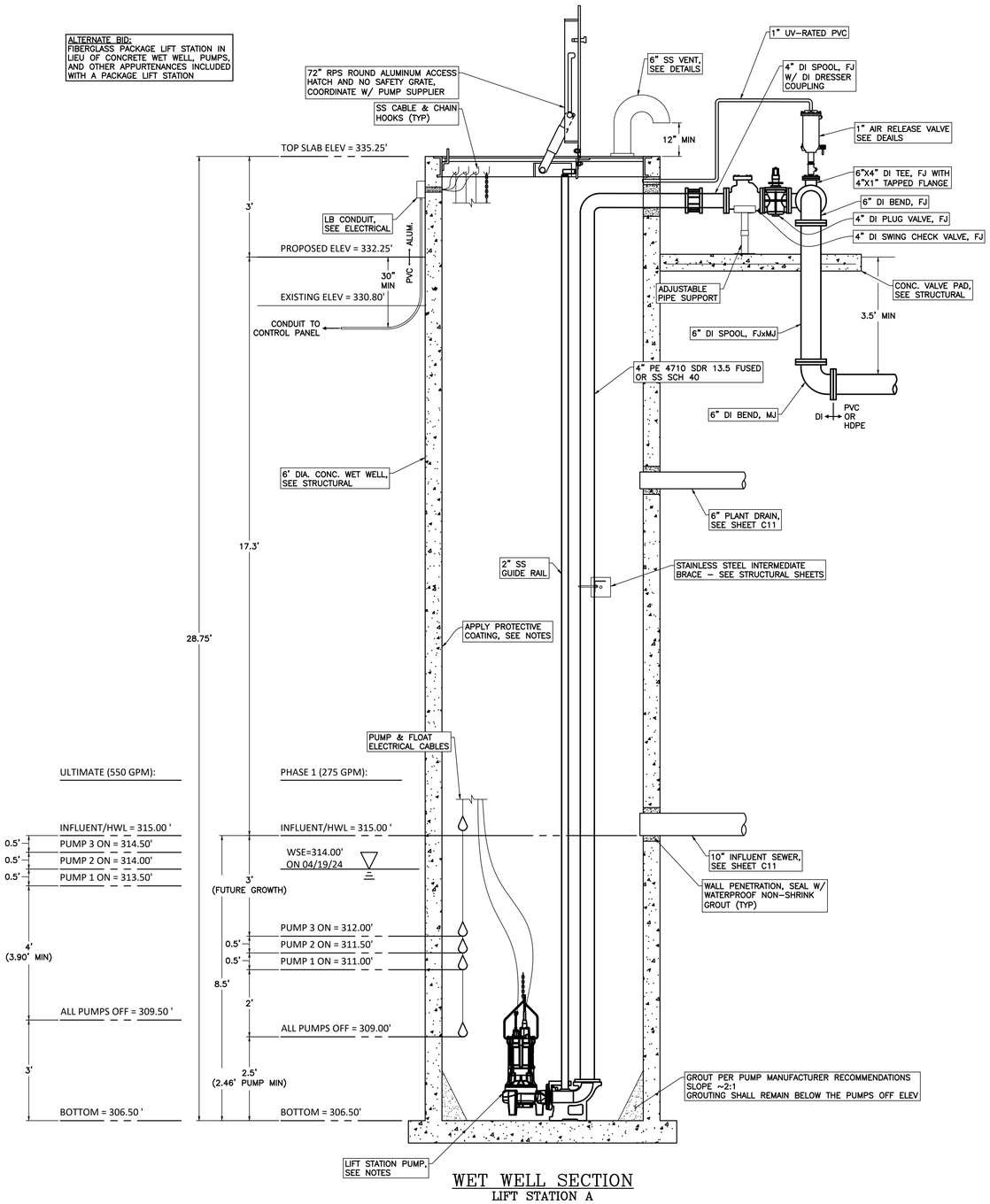

WET WELL SECTION
LIFT STATION A
SCALE: NTS

LIFT STATION NOTES:

1. THREE (3) LIBERTY 3LM05 PUMPS W/ 7.25–INCH IMPELLER
   4" DISCHARGE CONNECTION
   5 HP, 460 VOLT, 3 PHASE, 1750 RPM
   RATED FOR 150 GPM @ 38' TDH
   INSTALL GUIDE RAILS, ANCHOR ELBOW, ETC.
2. VIEWS ARE ROTATED FOR CLARITY, SEE SITE PLAN FOR ORIENTATION.
3. VERIFY ALL ELEVATIONS AND DIMENSIONS PRIOR TO CONSTRUCTION.
4. UNLESS OTHERWISE NOTED, ALL PIPING AND FITTINGS SHALL BE DUCTILE IRON PIPE WITH P401 INTERIOR LINING, SS BOLTS AND SS WASHERS.
5. PROVIDE COATING:
   CONCRETE INTERIOR WET WELL:
   TRIM BLACK RAM NECK SEAL, GROUT SEAL JOINTS
   RAVEN 405 – 100 MILS OR CARBOLINE HYDROPLATE 6500 – 100 MILS

   EXTERIOR PIPING (DI):
   SAND BLAST NEAR WHITE, OR SHOP PRIMED, 2.0 TO 3.0 PROFILE (SWEEP BLAST VALVES)
   CARBOZINC 859, 2 TO 4 MILS
   CORBOGUARD 60, 4 TO 6 MILS
   CARBOTHANE 134HG, 2 TO 3 MILS (PROVIDE TOUCH UP PAINT)
   FINAL COLOR SHALL BE GREEN. SEE PAINTING & COATING SPEC.

   EXTERIOR PIPING (HDPE):
   HAND OR POWER TOOL SAND
   CARBOLINE RUSTBOND, 1 TO 2 MILS
   CARBOTHANE 134HG, 2 TO 3 MILS (PROVIDE TOUCH UP PAINT)
   FINAL COLOR SHALL BE GREEN. SEE PAINTING & COATING SPEC.
6. ALL NUTS, BOLTS, ANCHORS, AND OTHER MISCELLANEOUS HARDWARE IN WET WELL SHALL BE SERIES 300 STAINLESS STEEL.
7. ALL STAINLESS STEEL CONNECTIONS SHALL BE PROTECTED BY ANTI–SEIZING COMPOUND.
8. UNLESS OTHERWISE NOTED, ALL PIPE CENTERED IN WALLS SHALL HAVE A WALL FLANGE. ALL WALL FLANGES SHALL BE CAST–IN–PLACE WITH STRUCTURAL CONCRETE OR GROUTED IN BLOCK–OUTS WITH NON–SHRINK GROUT.
9. PROVIDE SS HOOKS ON GUIDE BAR BRACKET. PUMP CABLES TO BE PROVIDED WITH AT LEAST 5' OF SLACK.
10. PERFORMANCE TESTING TO BE PERFORMED BY THE PUMP SUPPLIER TO VERIFY INSTALLATION, ROTATION, AND CAPACITY. CAPACITY TO BE ESTIMATED BASED ON A FIELD PUMP DOWN TEST WHICH INVOLVES FILLING THE WET WELL, CALCULATING THE VOLUME, AND MEASURING THE AMOUNT OF TIME TAKEN TO PUMP DOWN. WATER FOR TESTING SHALL BE AT THE CONTRACTOR'S EXPENSE.
11. WATER SURFACE ELEVATION WAS MEASURED AT 314.00' ON 04/19/2024. REFERENCE GEOTECHNICAL REPORT FOR ADDITIONAL INFORMATION.
12. ALT BIDS
- SS DISCHARGE PIPING (NO COATING REQUIRED)
- POLYMER CONCRETE WET WELL (NO COATING REQUIRED)

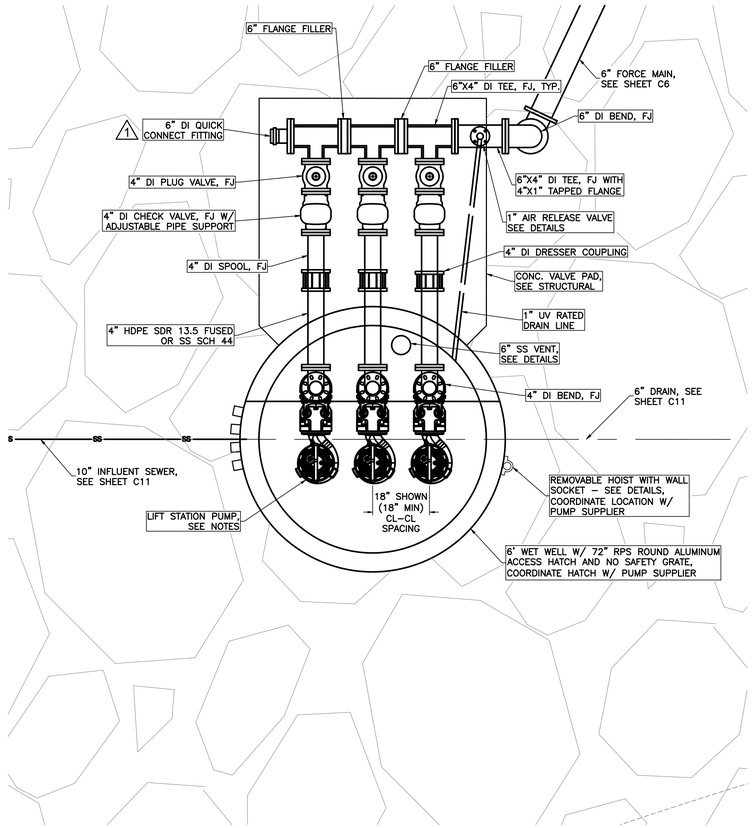

INSET A
SCALE: NTS

REV	DATE	COMMENTS
1	2/9/26	TWDB COMMENTS
0	12/5/25	90% SUBMITTAL XXXXXX

PREPARED FOR:
CITY OF IOLA
P.O. BOX 84
IOLA, TEXAS 77861
TPDES WQ0016021–001

BLEYL ENGINEERING
PLANNING • DESIGN • MANAGEMENT
1722 Broadmoor, Suite 210, Bryan Tx. 77802
Texas Firm Registration No. F-678
Tel. 979-268-1125 Fax 979-260-3849
www.bleylengineering.com
BRYAN CONROE HOUSTON AUSTIN

LIFT STATION A
CITY OF IOLA
0.100 MGD WASTEWATER TREATMENT PLANT
TWDB CWSRF PROJECT NO. 10422
GLO PROJECT NO. 24–065–165–F080

STATE OF TEXAS
STEVE E. DUNCAN
83252
LICENSED PROFESSIONAL ENGINEER
2/9/2026

DESIGN: SED	
CAD: JDR	RVW: SED
PROJECT NO:	12693
SHEET: C10	

2/11/2026 7:38:10 AM
Z:\12600\12693 IOLA–TWDB WASTEWATER SYSTEM\04 CAD\CD–12693\WWTP PROJECT\10 LIFT STATION A.DWG
ZVOTAW

ORIGINAL LAYOUT SIZE – 22X34

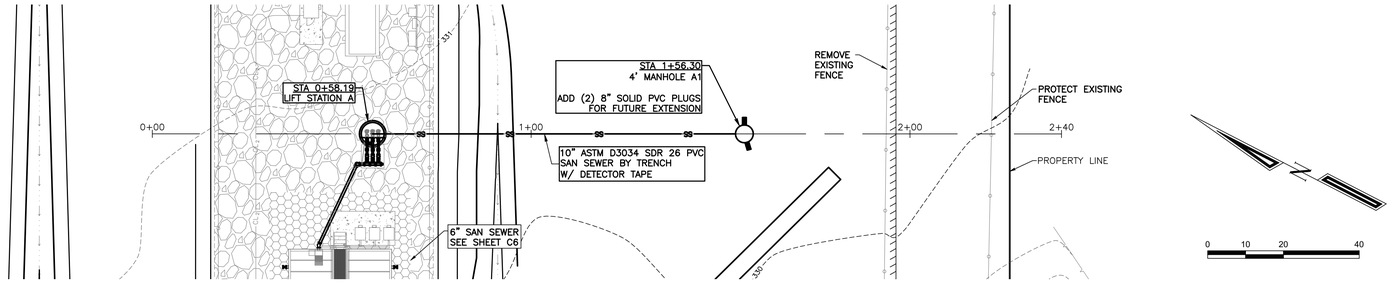

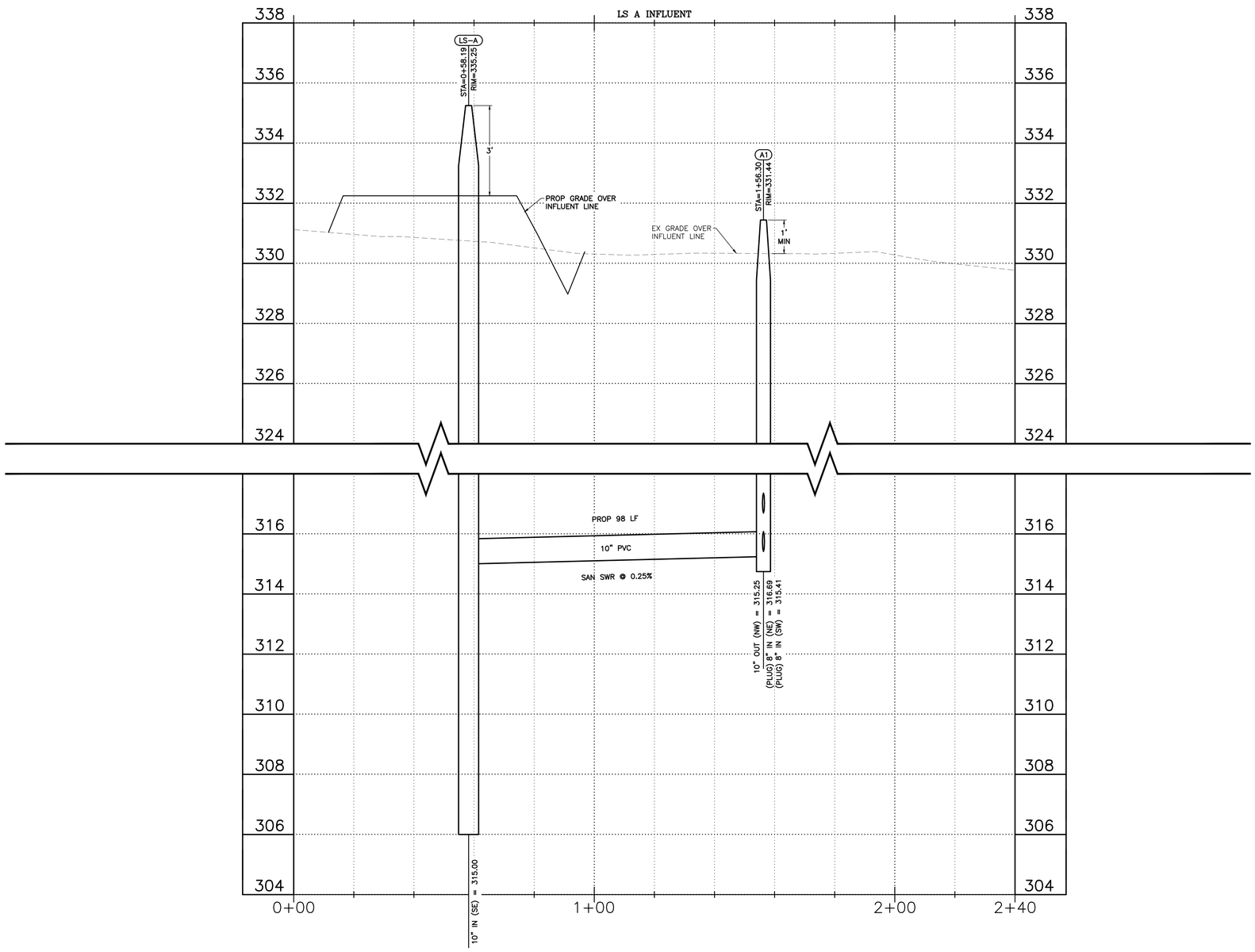

REV	DATE	COMMENTS
1	2/9/26	TWDB COMMENTS
0	12/3/25	ORIGINAL

PREPARED FOR:
CITY OF IOLA
P.O. BOX 84
IOLA, TEXAS 77861
TPDES WQ0016021-001

BLEYL ENGINEERING
PLANNING • DESIGN • MANAGEMENT
1722 Broadmoor, Suite 210, Bryan Tx. 77802
Texas Firm Registration No. F-678
Tel. 979-268-1125 Fax 979-260-3849
www.bleylengineering.com
AUSTIN BRYAN CONROE HOUSTON

INFLUENT PLAN & PROFILE

CITY OF IOLA
0.100 MGD WASTEWATER
TREATMENT PLANT
TWDB CWSRF PROJECT NO. 10422
GLO PROJECT NO. 24-065-165-F080

STATE OF TEXAS
STEVE E. DUNCAN
83252
LICENSED
PROFESSIONAL ENGINEER
2/9/2026

DESIGN: SED	
CAD: JDR	RVW: SED
PROJECT NO:	12693
SHEET: C11	

JRANSOM
2/11/2026 7:39:45 AM
Z:\12600\12693 IOLA-TWDB WASTEWATER SYSTEM\04 CAD\CD-12693\WWTP PROJECT\11 INFLUENT P&P.DWG

ORIGINAL LAYOUT SIZE – 22X34

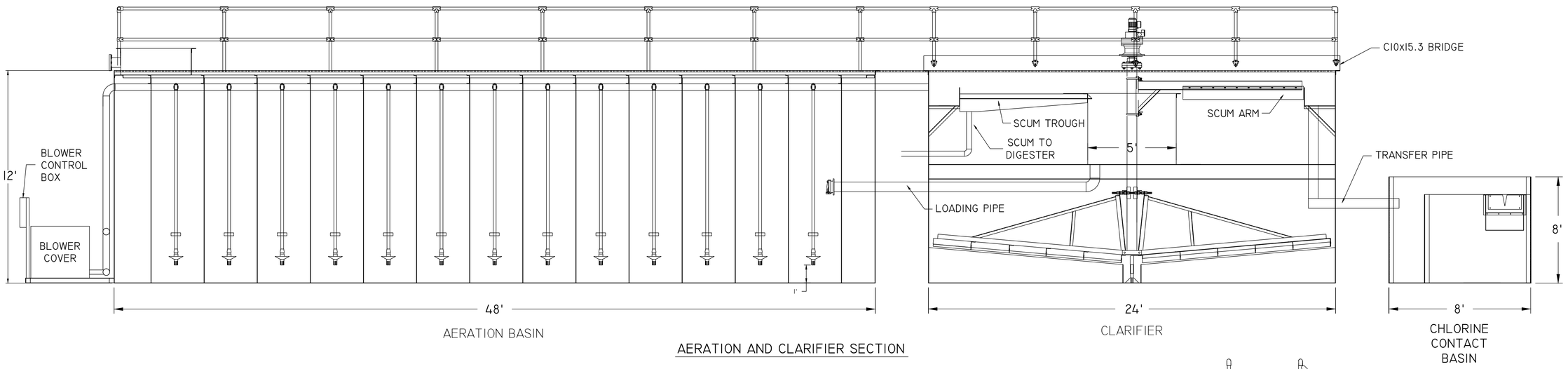

AERATION AND CLARIFIER SECTION

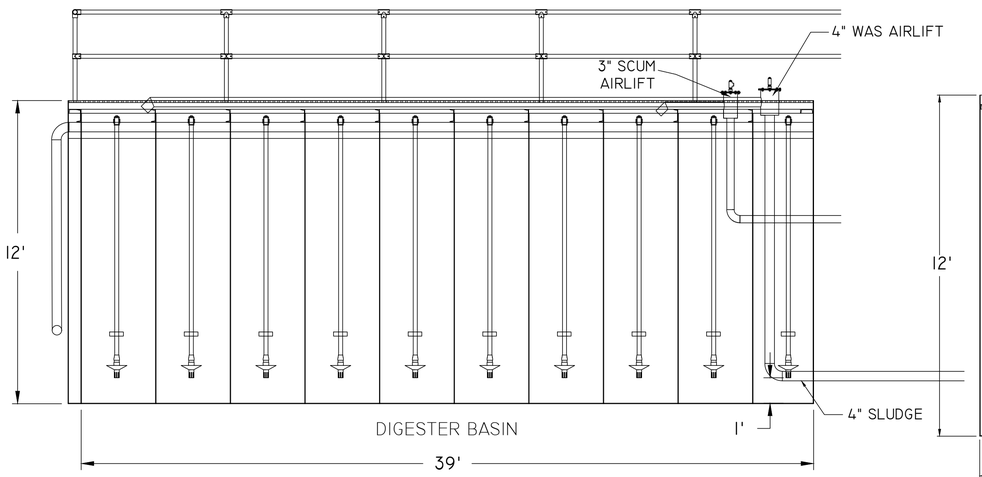

DIGESTER SECTION

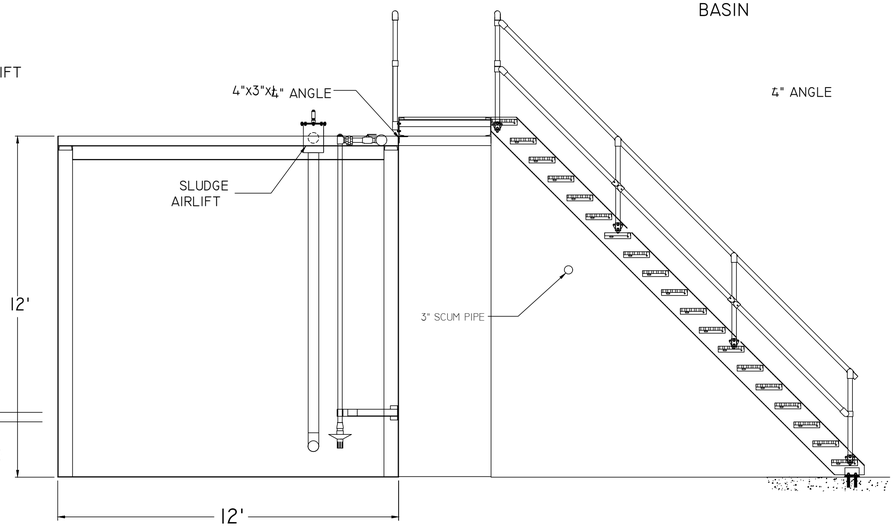

STAIR SECTION

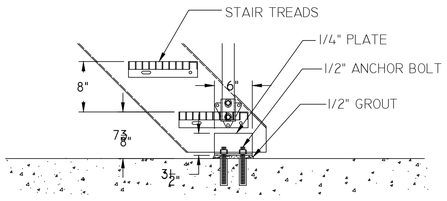

STAIR DETAIL

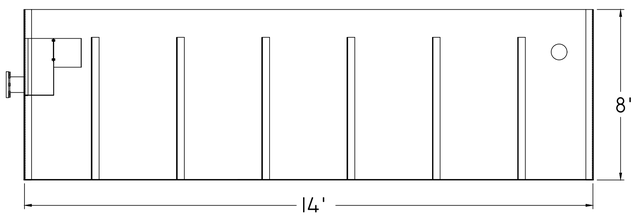

CHLORINE CONTACT BASIN SECTION

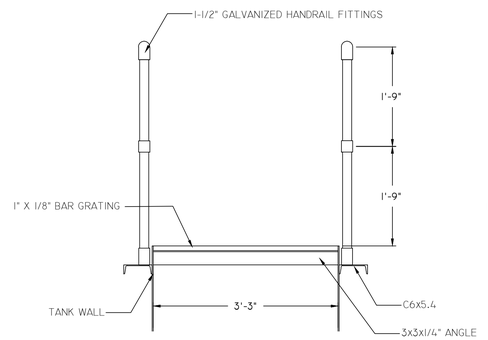

WALKWAY DETAILS

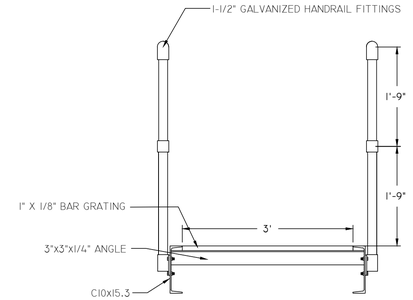

BRIDGE DETAILS

REV	DATE	COMMENTS
1	2/9/26	TWDB COMMENTS
0	12/3/25	ORIGINAL

PREPARED FOR:
CITY OF IOLA
P.O. BOX 84
IOLA, TEXAS 77861
TPDES WQ0016021-001

BLEYL ENGINEERING
PLANNING • DESIGN • MANAGEMENT
1722 Broadmoor, Suite 210, Bryan Tx. 77802
Texas Firm Registration No. F-678
Tel. 979-268-1125 Fax 979-260-3849
www.bleylengineering.com
BRYAN CONROE HOUSTON AUSTIN

ELEVATION SECTIONS

CITY OF IOLA
0.100 MGD WASTEWATER TREATMENT PLANT
TWDB CWSRF PROJECT NO. 10422
GLO PROJECT NO. 24-065-165-F080

STATE OF TEXAS
STEVE E. DUNCAN
83252
LICENSED
PROFESSIONAL ENGINEER
2/9/2026

DESIGN: SED	
CAD: JDR	RVW: SED
PROJECT NO:	12693
SHEET: C12	

Z:\12600\12693 IOLA-TWDB WASTEWATER SYSTEM\04 CAD\CD-12693\WWTP PROJECT\12-14 ELEVATIONS & DETAILS.DWG
2/11/2026 7:39:54 AM
ZVOTAW

ORIGINAL LAYOUT SIZE – 22X34

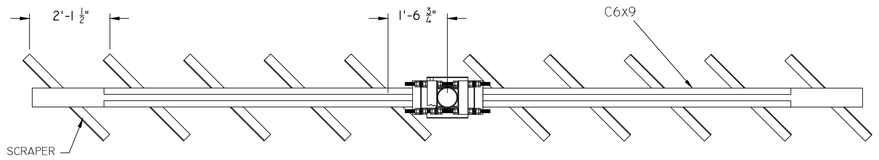

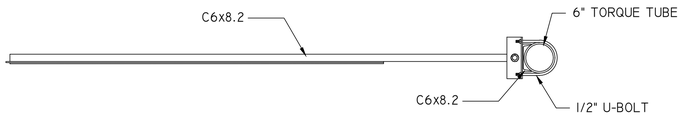

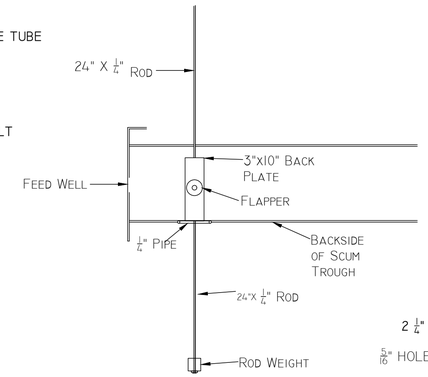

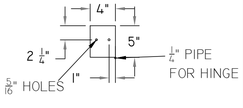

SECTION A-A

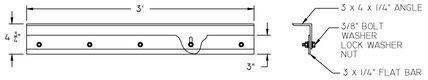

SCRAPER DETAIL

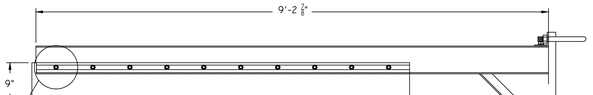

SCUM ARM

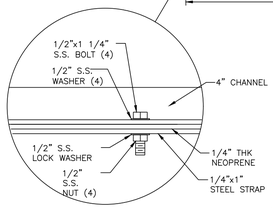

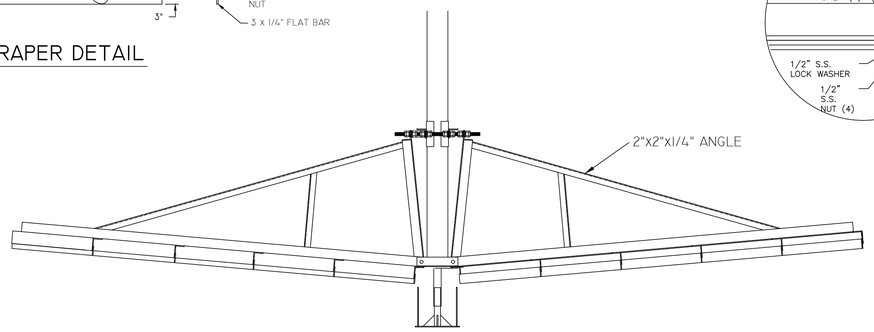

SCRAPER ARMS

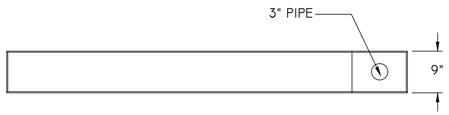

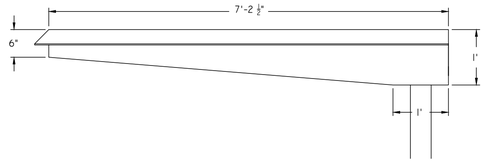

SCUM TROUGH

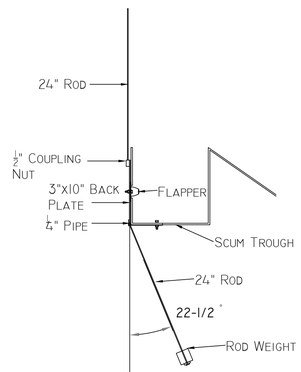

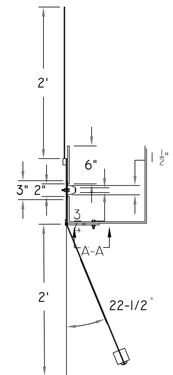

FLUSH VALVE DETAIL

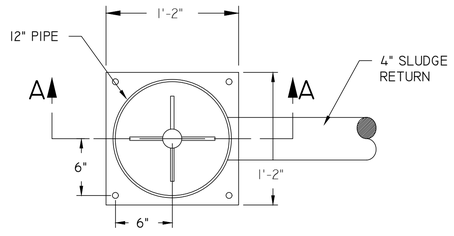

TOP VIEW

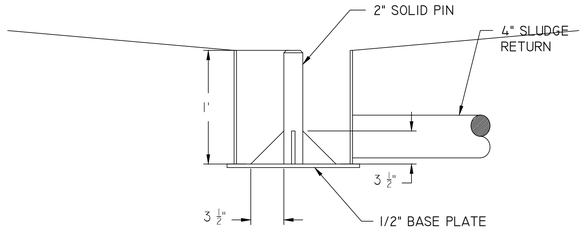

"A A" FRONT VIEW

TORQUE TUBE PIVOT

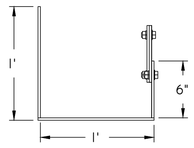

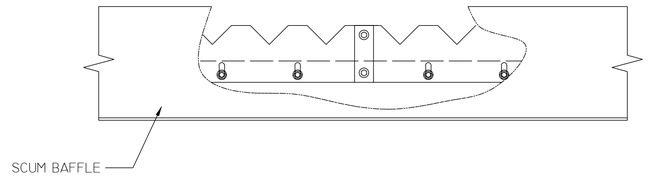

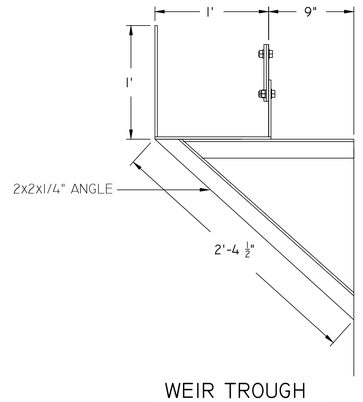

WEIR TROUGH

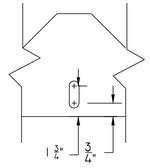

(1) ADJUSTMENT HOLES DETAIL

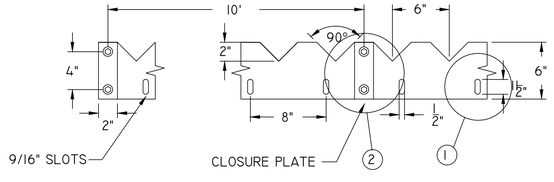

S.S. WEIR PLATE

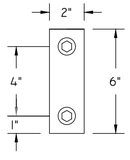

(2) CLOSURE PLATE DETAIL

WEIR TROUGH

REV	DATE	COMMENTS
1	2/9/26	TWDB COMMENTS
0	12/3/25	ORIGINAL

PREPARED FOR:
CITY OF IOLA
P.O. BOX 84
IOLA, TEXAS 77861
TPDES WQ0016021-001

BLEYL ENGINEERING
PLANNING • DESIGN • MANAGEMENT
1722 Broadmoor, Suite 210, Bryan Tx. 77802
Texas Firm Registration No. F-678
Tel. 979-268-1125 Fax 979-260-3849
www.bleylengineering.com
AUSTIN BRYAN CONROE HOUSTON

CLARIFIER DETAILS

CITY OF IOLA
0.100 MGD WASTEWATER TREATMENT PLANT
TWDB CWSRF PROJECT NO. 10422
GLO PROJECT NO. 24-065-165-F080

STATE OF TEXAS
STEVE E. DUNCAN
83252
LICENSED PROFESSIONAL ENGINEER
2/9/2026

DESIGN: SED	
CAD: JDR	RVW: SED
PROJECT NO:	12693
SHEET: C13	

ZVOTAW
Z:\12600\12693_IOLA-TWDB WASTEWATER SYSTEM\04 CAD\CD-12693\WWTP PROJECT\12-14 ELEVATIONS & DETAILS.DWG
2/11/2026 7:40:00 AM

ORIGINAL LAYOUT SIZE – 22X34

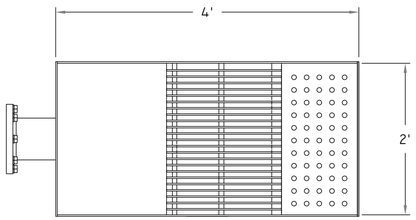

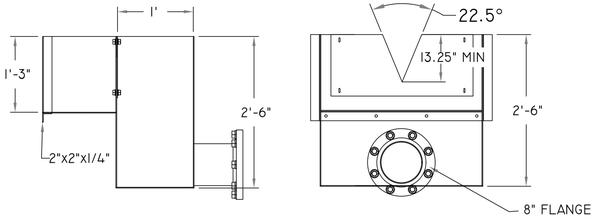

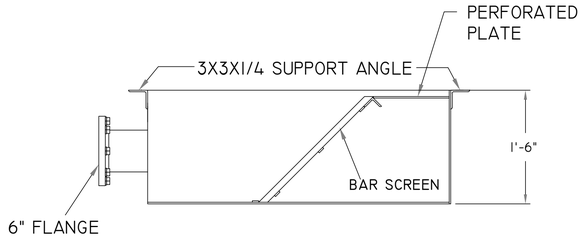

BARSCREEN DETAIL

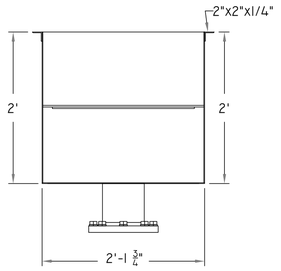

WEIR BOX DETAIL

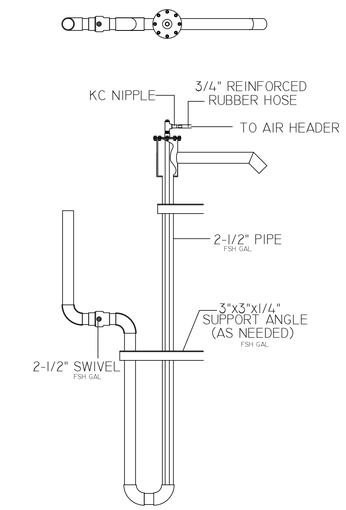

2-1/2" SWIVEL DECANT AIRLIFT

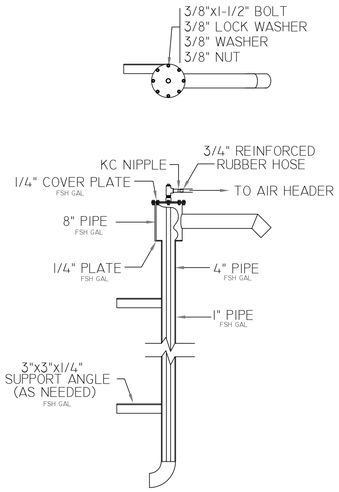

4" AIRLIFT

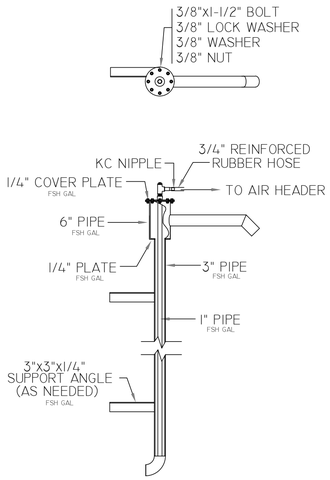

3" AIRLIFT

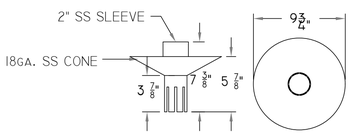

DIFFUSER DETAIL

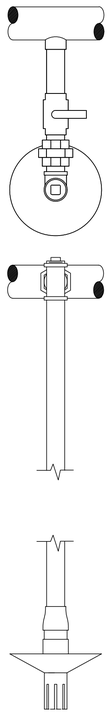

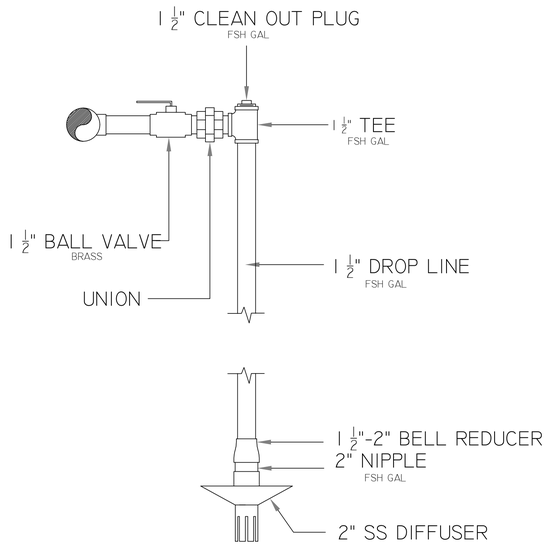

AIR DROP DETAILS

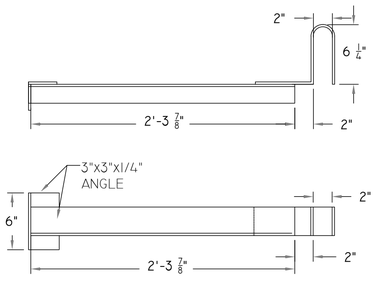

AIR DROP SUPPORT

REV	DATE	COMMENTS
0	12/3/25	ORIGINAL
1	2/9/26	TWDB COMMENTS

PREPARED FOR:
CITY OF IOLA
P.O. BOX 84
IOLA, TEXAS 77861
TPDES WQ0016021-001

BLEYL ENGINEERING
PLANNING • DESIGN • MANAGEMENT
1722 Broadmoor, Suite 210, Bryan Tx. 77802
Texas Firm Registration No. F-678
Tel. 979-268-1125 Fax 979-260-3849
www.bleylengineering.com
AUSTIN BRYAN CONROE HOUSTON

TANK EQUIPMENT DETAILS

CITY OF IOLA
0.100 MGD WASTEWATER TREATMENT PLANT
TWDB CWSRF PROJECT NO. 10422
GLO PROJECT NO. 24-065-165-F080

STATE OF TEXAS
STEVE E. DUNCAN
83252
LICENSED
PROFESSIONAL ENGINEER
2/9/2026

DESIGN: SED	
CAD: JDR	RVW: SED
PROJECT NO:	12693
SHEET: C14	

Z:\12600\12693 IOLA-TWDB WASTEWATER SYSTEM\04 CAD\CD-12693\WWTP PROJECT\12-14 ELEVATIONS & DETAILS.DWG 2/11/2026 7:40:05 AM ZVOTAW

ORIGINAL LAYOUT SIZE – 22X34

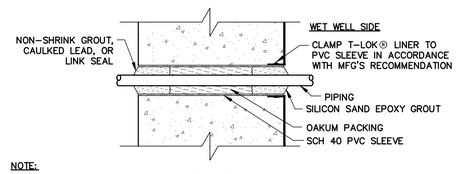

NOTE:
SLEEVED WET WELL PENETRATION IS NOT TO BE USED FOR CONDUIT INSTALLATION. SEE ELECTRICAL DETAIL SHEETS FOR CONDUIT PENETRATIONS.

SLEEVED WET WELL PENETRATION FOR PIPING 4"ø & SMALLER
NTS

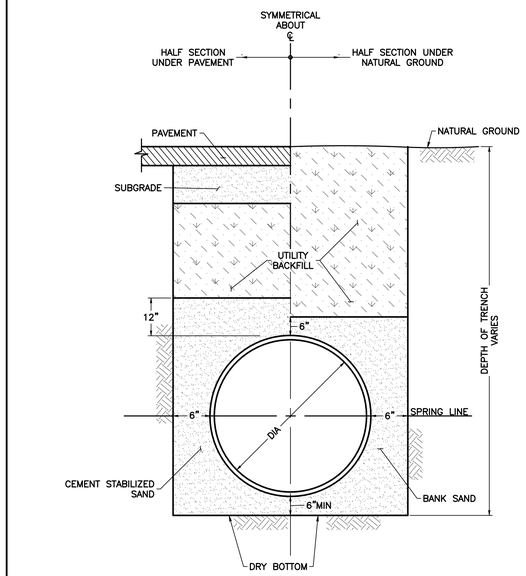

WATER LINE BEDDING AND BACKFILL
WTR–113 (ALT 1)
SCALE: NTS | 01/12/23

NOTES:
1. PROVIDE 100' OF 3/4" HEAVY DUTY HOSE W/ BRASS NOZZLE

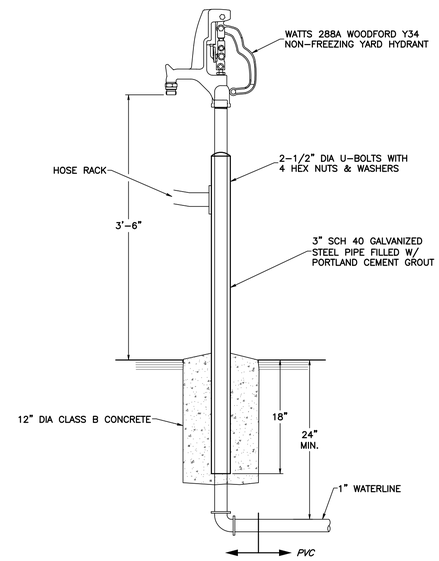

NON–FREEZING HOSE BIBB
WTR–B–104
SCALE: NTS | 7/27/23

NOTES:
1. INSULATE THE REDUCED PRESSURE BACKFLOW PREVENTER TO AVOID FREEZING.
2. THE REDUCED PRESSURE BACKFLOW PREVENTER'S DISCHARGE OPENING IS TO BE A MINIMUM OF 12 INCHES ABOVE THE GROUND ELEVATION OR 100 YEAR FLOOD ELEVATION WHICHEVER IS GREATER.

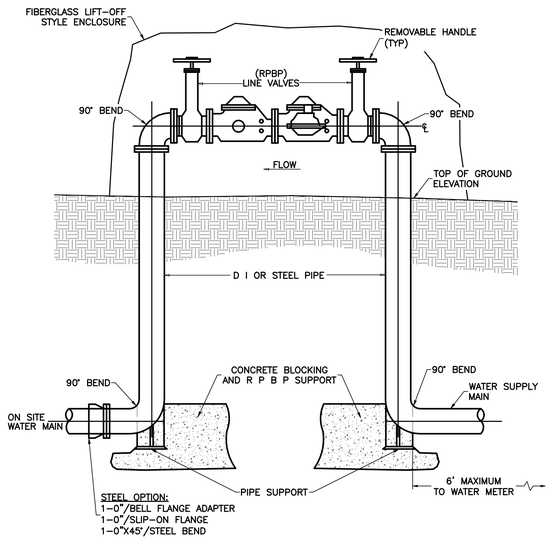

REDUCED PRESSURE BACKFLOW–PREVENTER
WTR–116
SCALE: NTS | 03/22/21

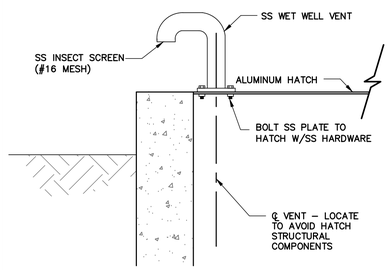

TYPICAL HIGH PROFILE WET WELL VENTING INSTALLATION
NTS

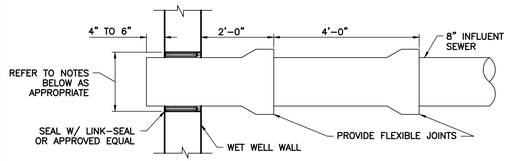

FOR OPENINGS TO BE CORED (CAISSON CONSTRUCTION):
1. IDENTIFY PIPE PENETRATION LOCATION WITH 1" DIA PLASTIC PIPE SLEEVE.
2. DIAMETER OF PENETRATION OPENING SHALL BE EQUAL TO PIPE OUTER DIAMETER PLUS 2 TIME LINK–SEAL THICKNESS.
3. PROVIDE ADDITIONAL REINFORCEMENT AROUND PENETRATION OPENING AS PER STRUCTURAL DRAWINGS BEFORE CASTING WALL.

FOR OPENINGS TO BE SLEEVED OR FORMED (CAISSON CONSTRUCTION):
1. IDENTIFY PIPE PENETRATION LOCATION.
2. DIAMETER OF PENETRATION OPENING SHALL BE EQUAL TO PIPE OUTER DIAMETER PLUS 2 TIMES LINK–SEAL THICKNESS. SEE "TYPICAL PIPE BLOCK–OUT DETAIL FOR CAISSON CONSTRUCTION," THIS SHEET.
3. PROVIDE ADDITIONAL REINFORCEMENT AROUND PENETRATION OPENING AS PER STRUCTURAL DRAWING BEFORE CASTING WALL.

FOR OPENINGS TO BE FORMED OR SLEEVED (OPEN CUT CONSTRUCTION):
1. IDENTIFY PIPE PENETRATION LOCATION.
2. DIAMETER OF PENETRATION OPENING SHALL BE EQUAL TO PIPE OUTER DIAMETER PLUS 2 TIMES LINK–SEAL THICKNESS.
3. PROVIDE ADDITIONAL REINFORCEMENT AROUND PENETRATION OPENING AS PER STRUCTURAL DRAWING BEFORE CASTING WALL.

TYP WET WELL PENETRATION DETAIL
NTS

NOTES:
1. SIGNS TO BE 0.080 ALUMINUM WITH FULL COLOR GRAPHIC VINYL, SINGLE FACED, PREDRILLED
2. LETTER TO BE 1.5" TALL MIN PER TCEQ
3. PROVIDE THE FOLLOWING:
   1–24"X36" "IN CASE OF EMERGENCY" SIGN (BLUE BACKGROUND, WHITE LETTERS) MOUNT ON FENCE W/ GALV HARDWARE
   1–24"X36" "NO TRESPASSING" SIGN (RED BACKGROUND, WHITE LETTERS) MOUNT ON FENCE W/ GALV HARDWARE
   ~~2–12"X18" "NON–POTABLE WATER" SIGN, WITH ENGLISH AND SPANISH AND TCEQ SYMBOL (RED BACKGROUND, WHITE LETTERS) MOUNT ON HANDRAIL NEAR HOSE BIBB WITH GALV HARDWARE~~

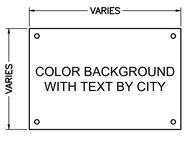

SIGNAGE
NTS

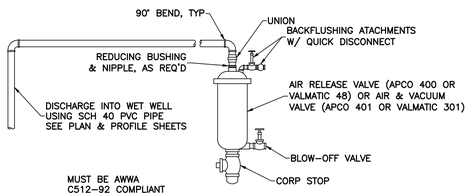

AIR RELEASE & AIR VACUUM VALVE ASSEMBLY
NTS

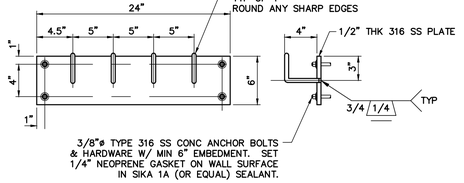

TYPICAL CABLE HOLDER ASSY
NTS

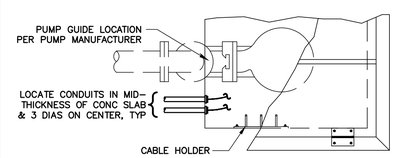

CABLE HOLDER
NTS

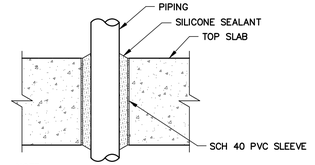

NOTE:
SLEEVED SLAB PENETRATION IS NOT TO BE USED FOR WET WELL PENETRATIONS.

SLEEVED SLAB PENETRATION
NTS

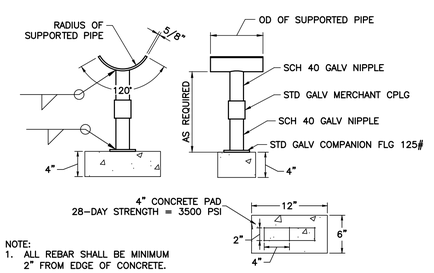

NOTE:
1. ALL REBAR SHALL BE MINIMUM 2" FROM EDGE OF CONCRETE.

TYP ADJUSTABLE PIPE SUPPORT
NTS

REV	DATE	COMMENTS
1	2/9/26	TWDB COMMENTS
0	12/3/25	ORIGINAL

PREPARED FOR:
CITY OF IOLA
P.O. BOX 84
IOLA, TEXAS 77861
TPDES WQ0016021–001

BLEYL ENGINEERING
PLANNING • DESIGN • MANAGEMENT
1722 Broadmoor, Suite 210, Bryan Tx. 77802
Texas Firm Registration No. F-678
Tel. 979-268-1125 Fax 979-260-3849
www.bleylengineering.com
BRYAN CONROE HOUSTON AUSTIN

PROJECT DETAILS 1

CITY OF IOLA
0.100 MGD WASTEWATER TREATMENT PLANT
TWDB CWSRF PROJECT NO. 10422
GLO PROJECT NO. 24–065–165–F080

STATE OF TEXAS
STEVE E. DUNCAN
83252
LICENSED PROFESSIONAL ENGINEER
2/9/2026

DESIGN: SED	
CAD: JDR	RVW: SED
PROJECT NO:	12693
SHEET: C15	

SDUNCAN 2/11/2026 7:40:14 AM
Z:\12600\12693_IOLA–TWDB WASTEWATER SYSTEM\04 CAD\CD–12693\WWTP PROJECT\15–16 DETAILS.DWG

ORIGINAL LAYOUT SIZE – 22X34

SERIES D HOIST WALL SOCKETS

HALLIDAY PRODUCTS OR EQUAL
MODEL NO.: D1V
QUANTITY: 6 (1 INSTALLED AT WWTP LIFT STATION A, 5 TO BE INSTALLED BY OTHERS)
DOCUMENT NO.: Q86273
DATE: 12/19/24
LOCATION/TAG:

STANDARD FEATURES:
STAINLESS STEEL CONSTRUCTION
POLYMER LINING
3 YEAR GUARANTEE

MATERIAL:
[X] T-304
[ ] T-316

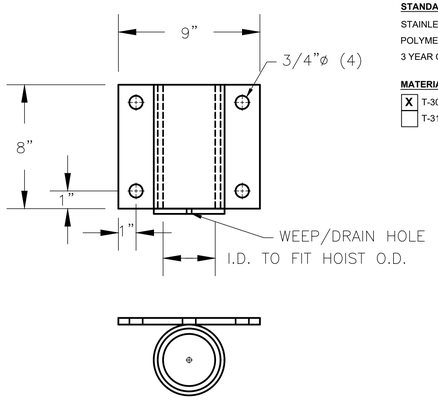

PORTABLE HOIST WALL MOUNT
SCALE: NTS

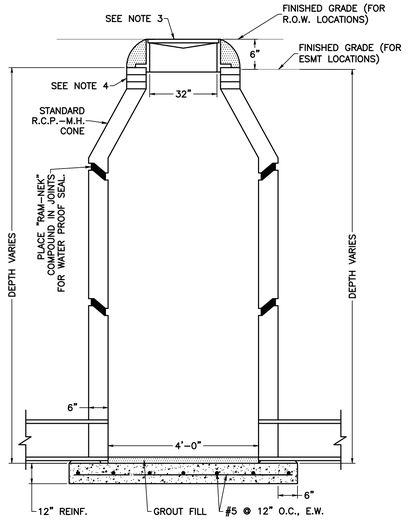

NOTES:
1. A DROP PIPE SHALL BE PROVIDED FOR A SANITARY SEWER ENTERING A MANHOLE MORE THAN 24" ABOVE THE MANHOLE INVERT.
2. ALL R.C.P. MANHOLES SHALL BE IN ACCORDANCE A.S.T.M. C–478.
3. VULCAN FOUNDARY V–1600–4 FRAME AND COVER (OR EQUAL) WITH "SANITARY" EMBEDDED IN LID.
4. FOR ADJUSTMENT OF MANHOLE LID USE STANDARD CONCRETE RINGS. NO BRICK ADJUSTMENT ALLOWED.
5. PRECAST BOTTOM SECTION OF MANHOLE TO BE SECURELY ATTACHED TO REINFORCED CONCRETE SLAB WITH WATERPROOF SEALER.
6. MANHOLE SHALL BE LINED WITH "CARBOLINE PLASITE 4500" OR APPROVED EQUAL.
7. CONNECT PIPES TO MANHOLE WITH FLEXIBLE BOOT.

STANDARD SANITARY PRECAST MANHOLE
SAN–002
SCALE: NTS | 12/19/19

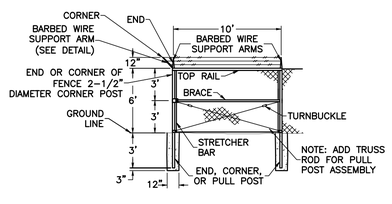

CORNER OR END PANEL ASS'Y PULL POST ASS'Y SIMILAR

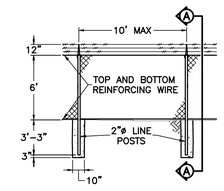

TYPICAL LINE FENCE VIEW A–A

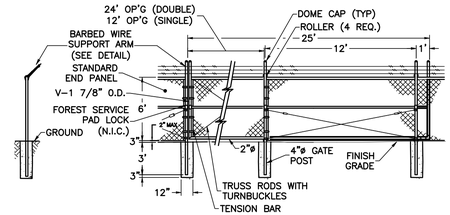

ROLLING CANTILEVER GATE DETAIL

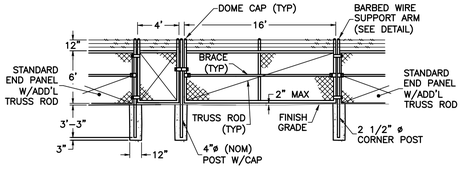

DUAL SWING GATE ASSEMBLY

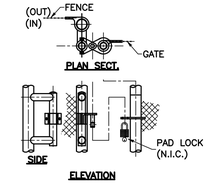

GATE LATCH DETAIL

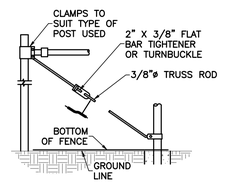

TYPICAL DETAIL TRUSS ROD TIES

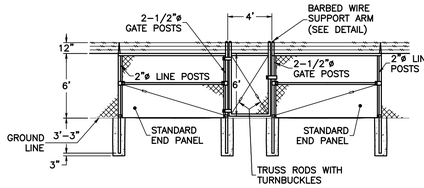

SINGLE PANEL GATE

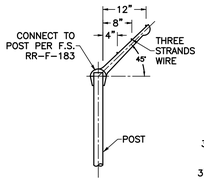

BARBED WIRE SUPPORT ARM AND POST CAP

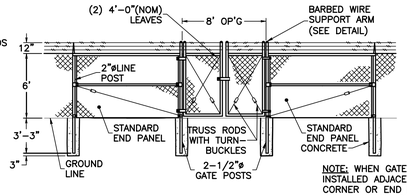

NOTE: WHEN GATES ARE INSTALLED ADJACENT TO CORNER OR END PANELS, INSTALL TRUSS RODS AS IN PULL POST ASSEMBLIES.

DOUBLE PANEL GATE DETAIL

6' CHAIN LINK FENCE WITH BARBED WIRE
SCALE: NTS

REV	DATE	COMMENTS
1	2/9/26	TWDB COMMENTS
0	12/3/25	ORIGINAL

PREPARED FOR:
CITY OF IOLA
P.O. BOX 84
IOLA, TEXAS 77861
TPDES WQ0016021–001

BLEYL ENGINEERING
PLANNING • DESIGN • MANAGEMENT
1722 Broadmoor, Suite 210, Bryan Tx. 77802
Texas Firm Registration No. F-678
Tel. 979-268-1125 Fax 979-260-3849
www.bleylengineering.com
BRYAN CONROE HOUSTON AUSTIN

SERIES DB
ADJUSTABLE REACH PORTABLE HOIST

HALIDAY PRODUCTS OR EQUAL
MODEL NO: D1B36F30AB60BA
QUANTITY: 1
DOCUMENT NO. Q86273
DATE: 12/19/24
LOCATION/TAG:

STANDARD FEATURES:
STAINLESS STEEL CONSTRUCTION
S.STL. CABLE
3 YEAR GUARANTEE

310 LB. MAX. CAPACITY
35 FT. OF **3/16"** DIAMETER CABLE

CABLE MAT'L. [X] T-304 [ ] T-316
HOIST MAT'L. [X] T-304 [ ] T-316

STANDARD CABLE ENDS:
(ALL CABLE END ASSEMBLIES INCLUDE COPPER NICOPRESS SLEEVE W/ S.STL. THIMBLE)
[X] GALV. SAFETY HOOK (STANDARD)

OPTIONAL ENDS:
[ ] S.STL. SAFETY HOOK
[ ] S.STL. SHACKLE (SIZE)

WINCH TYPE:
[ ] NONE

T-304 S.STL. WINCHES:
[X] OZ1000BWSS
[ ] OZ1500BWSS
[ ] OZ2000BWSS
[ ] THERN 4042PBSS
[ ] THERN 4312PBSS

MARINE GRADE BRAKE WINCHES:
[ ] THERN 4022PB
[ ] THERN 4312PB
[ ] 4WM2 WORM GEAR

[X] MILWAUKEE DRILL (FOR POWER ASSIST)

MIXERMAST HOIST:
[X] 24" TURN HANDLE(S)

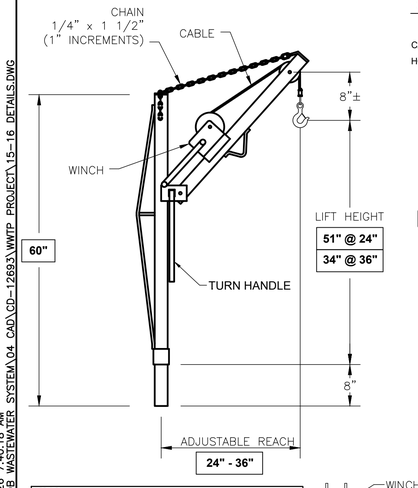

NOTES:
1. WINCH TO BE PROVIDED BY PUMP MANUFACTURER
2. POWER ASSIST DRILL TO BE MILWAUKEE MODEL 2808, 1/2" M18 HOLE HAWG RIGHT ANGLE DRILL WITH QUICK–LOK, HEX CHUCK EXTENSION WITH SOCKET, 8.0 AMP–HOUR BATTERY, BATTERY CHARGER AND BAG

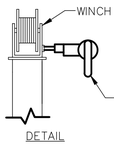

PORTABLE HOIST
SCALE: NTS

SUMMITDB

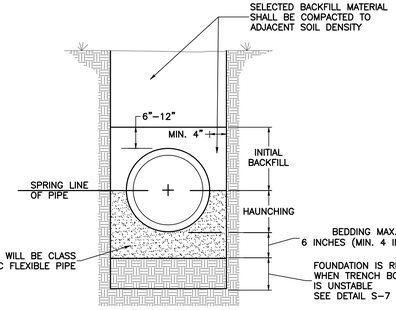

NOTE: BACKFILL AND BEDDING MUST MEET ALL MINIMUM ASPECTS OF ASTM D–2321

FOUNDATION
A FOUNDATION IS REQUIRED WHEN THE TRENCH BOTTOM IS UNSTABLE. ANY FOUNDATION THAT WILL SUPPORT A RIGID PIPE WITHOUT CAUSING LOSS OF GRADE OR FLEXURAL BREAKING WILL BE MORE THAN ADEQUATE FOR PVC PIPES.

BEDDING
THE BEDDING DIRECTLY UNDERNEATH THE PIPE IS REQUIRED ONLY TO BRING THE TRENCH BOTTOM UP TO GRADE. IT SHOULD NOT BE SO THICK OR SOFT THAT THE PIPE WILL SETTLE AND LOSE GRADE. THE PURPOSE OF THE BEDDING IS TO PROVIDE A FIRM, STABLE AND UNIFORM SUPPORT OF THE PIPE. A LAYER OF MATERIAL SUFFICIENT TO ESTABLISH LINE, GRADE, AND SUPPORT SHOULD BE PLACED. BELL HOLES SHOULD BE EXCAVATED TO ENSURE UNIFORM BEARING.

HAUNCHING
THE HAUNCHING AREA IS THE MOST IMPORTANT IN TERMS OF LIMITING THE DEFLECTION OF A FLEXIBLE PIPE. THIS IS THE AREA THAT SHOULD BE COMPACTED TO THE REQUIRED OR SPECIFIC DENSITY.

ASTM D–2321 DESCRIPTION OF EMBEDMENT MATERIALS

CLASS I
ANGULAR, 1/4" TO 1–1/2" GRADED STONE, INCLUDING A NUMBER OF FILL MATERIALS THAT HAVE REGIONAL SIGNIFICANCE, SUCH AS CORAL, SLAG, CINDERS, CRUSHED STONE AND CRUSHED SHELLS.

CLASS II
COARSE SANDS AND GRAVELS WITH MAXIMUM PARTICLE SIZE OF 1–1/2", INCLUDING VARIOUSLY GRADED SANDS, AND GRAVELS CONTAINING SMALL PERCENTAGES OF FINES, GENERALLY GRANULAR AND NONCOHESIVE, EITHER WET OR DRY. SOIL TYPES GW, GP, SW, AND SP ARE INCLUDED IN THIS CLASS.

CLASS III
FINE SAND AND CLAYEY GRAVELS, INCLUDING FINE SANDS AND SAND–CLAY MIXTURES, AND GRAVEL CLAY MIXTURES. SOIL TYPES GM, GC, SM, AND SC ARE INCLUDED IN THIS CLASS.

CLASS IV
SILT, SILTY CLAYS, AND CLAYS, INCLUDING INORGANIC CLAYS AND SILTS OF MEDIUM TO HIGH PLASTICITY AND LIQUID LIMITS. SOIL TYPES MH, ML, CH, AND CL, ARE INCLUDED IN THIS CLASS.

CLASS V
THIS CLASS INCLUDES THE ORGANIC SOILS OL, OH, AND PT AS WELL AS SOILS CONTAINING FROZEN EARTH, DEBRIS, ROCKS LARGER THAN 1–1/2" IN DIAMETER, AND OTHER FOREIGN MATERIALS. THESE MATERIALS ARE NOT RECOMMENDED FOR BEDDING, HAUNCHING, OR INITIAL BACKFILL.

SANITARY BEDDING AND TRENCH DETAIL
SAN–004
SCALE: NTS | 12/13/18

LOG OF BORING LS-A

Project Name: City of Iola Lift Station Project
Client: Bleyl Engineering
Boring Location: See Figure 2 (30.77667N 96.07972W)
Drilling Method: 4" Solid Flight Auger
Depth to Water: 16 ft.
Project No.: 63085
Completion Date: 4/19/24
Logger/Driller: J Lind
Surface Elevation: N/A
Completion Depth: 30'

Depth (ft.)	Sampling Method	Soil Class Symbol	DESCRIPTION OF MATERIAL	Moisture Content, %	Pass #200 Sieve, %	Liquid Limit, %	Plasticity Index	Compr. Strength: Pocket Pen., tsf	Compr. Strength: Unconfined, tsf	Compr. Strength: Triaxial, tsf	Unit Dry Weight, pcf	SPT N-Value Blowsft	Elevation (ft.)
0			SOIL CLASSIFICATION / LABORATORY TESTS										
2.5			SANDY LEAN CLAY (CL) - Soft Brown - w/ organics @ 0-1' (Topsoil)									4	
5			- Very Stiff @ 2'-6'									15	
7.5			- Hard @ 6'-8'	20.4	74.5	22	7	3.0 / 4.5					
10			CLAYEY SAND (SC) - Dense Light Gray	9.3	22.0							36	
12.5				22.3	17.4	23	9					36	
15													
17.5				25.3	34.9	35	17					37	
20													
22.5				22.6	14.0	27	13					56	
25			- Very Dense @ 23'-25'										
27.5												43	
30													

CME TESTING AND ENGINEERING, INC. Page: 1 of 1

GEOTECH BORE LOG LIFT STATION A
SCALE: NTS

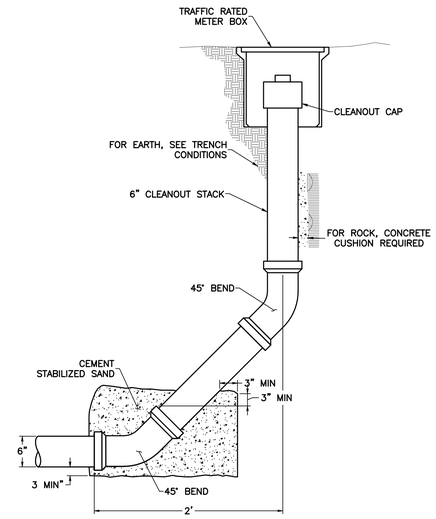

6" CLEANOUT W/ CONCRETE COLLAR
SCALE: NTS

PROJECT DETAILS 2

CITY OF IOLA
0.100 MGD WASTEWATER TREATMENT PLANT
TWDB CWSRF PROJECT NO. 10422
GLO PROJECT NO. 24-065-165-F080

STATE OF TEXAS
STEVE E. DUNCAN
83252
LICENSED PROFESSIONAL ENGINEER
2/9/2026

DESIGN: SED
CAD: JDR | RVW: SED
PROJECT NO: 12693
SHEET: C16

2/11/2026 7:40:18 AM IOLA–TWDB WASTEWATER SYSTEM\04 CAD\CD–12693\WWTP PROJECT\15–16 DETAILS.DWG
SDUNCAN Z:\12600\12693

ORIGINAL LAYOUT SIZE – 22X34

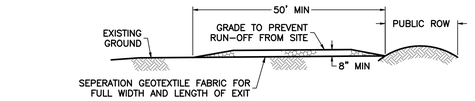

PROFILE

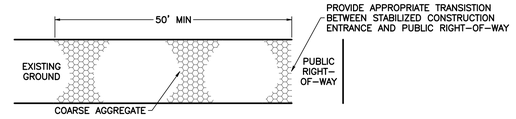

PLAN VIEW

SCE

STABILIZED CONSTRUCTION ENTRANCE

SCALE: NTS

NOTES:
1. LENGTH SHALL BE AS SHOWN ON THE CONSTRUCTION DRAWINGS, BUT NOT LESS THAN 50 FEET.
2. THICKNESS SHALL BE NOT LESS THAN 8 INCHES.
3. WIDTH SHALL BE NOT LESS THAN FULL WIDTH OF ALL POINTS OF INGRESS OR EGRESS.
4. STABILIZATION FOR OTHER AREAS SHALL HAVE THE SAME AGGREGATE THICKNESS AND WIDTH REQUIREMENTS AS THE STABILIZED CONSTRUCTION EXIT, UNLESS OTHERWISE SHOWN ON THE CONSTRUCTION DRAWINGS.
5. STABILIZED AREA MAY BE WIDENED OR LENGTHENED TO ACCOMODATE A TRUCK WASHING AREA. AN OUTLET SEDIMENT TRAP MUST BE PROVIDED FOR THE TRUCK WASHING AREA.
6. STABILIZED CONSTRUCTION EXIT SHALL BE MAINTAINED FREE OF SEDIMENT FOR THE DURATION OF THE PROJECT.

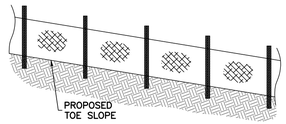

SILT FENCE DETAILS

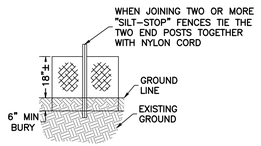

FRONT VIEW

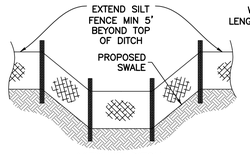

VIEW AT DITCH

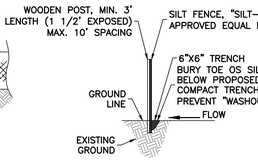

SIDE VIEW

-SF-SF-SF-

SILT FENCING

SCALE: NTS

SILT FENCING NOTES:
1. POST TO BE AT 3 ft. MAXIMUM SPACING. IF FACTORY PRE-ASSEMBLED FENCE WITH SUPPORT NETTING IS USED, SPACING OF POST MAY BE INCREASED TO 8 ft. MAXIMUM.
2. WHEN TWO SECTIONS OF FILTER CLOTH ADJOIN EACH OTHER THEY SHOULD BE OVERLAPPED 6 INCHES AT THE POSTS AND FOLDED.

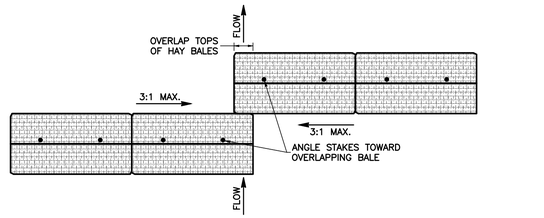

PLAN VIEW

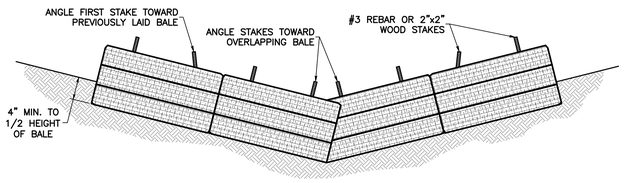

PROFILE VIEW

DITCH INSTALLATION

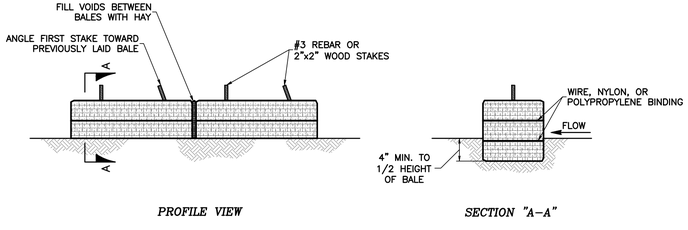

PROFILE VIEW — SECTION "A-A"

TYPICAL INSTALLATION

HAY BALE NOTES:
1. HAY BALES SHALL BE A MINIMUM OF 30" IN LENGTH AND WEIGH A MINIMUM OF 50 LBS.
2. HAY BALES SHALL BE BOUND BY EITHER WIRE OR NYLON OR POLYPROPYLENE STRING. THE BALES SHALL BE COMPOSED ENTIRELY OF VEGETABLE MATTER.
3. HAY BALES SHALL BE EMBEDDED IN THE SOIL A MINIMUM OF 4" AND WHERE POSSIBLE 1/2 THE HEIGHT OF THE BALE.
4. HAY BALES SHALL BE PLACED IN A ROW WITH ENDS TIGHTLY ABUTTING THE ADJACENT BALES. THE BALES SHALL BE PLACED WITH BINDINGS PARALLEL TO THE GROUND.
5. HAY BALES SHALL BE SECURELY ANCHORED IN PLACE WITH #3 REBAR OR 2"x2" WOOD STAKES, DRIVEN THROUGH THE BALES. THE FIRST STAKE SHALL BE ANGLED TOWARDS THE PREVIOUSLY LAID BALE TO FORCE THE BALES TOGETHER.
6. THE GUIDELINES SHOWN HEREON ARE SUGGESTIONS ONLY AND MAY BE MODIFIED BY THE ENGINEER.

HAY BALE

SCALE: NTS

EROSION CONTROL NOTES

1. CONTRACTOR SHALL IMPLEMENT INLET PROTECTION DEVICES AND REINFORCED FILTER FABRIC BARRIER ALONG DRIVE AND SIDE DITCHES AT LOCATIONS SHOWN ON THE TEMPORARY EROSION CONTROL PLAN TO KEEP SILT AND OR EXCAVATED MATERIALS FROM ENTERING INTO THE STORM WATER INLETS AND DITCHES EVENTUALLY POLLUTING THE RECEIVING STREAM.
2. DURING THE EXCAVATION PHASE OF THE PROJECT, CONTRACTOR SHALL SCHEDULE THE WORK IN SHORT SEGMENTS SO THAT EXCAVATION MATERIAL CAN BE QUICKLY HAULED AWAY FROM THE SITE AND TO PREVENT IT FROM STAYING UNCOLLECTED ON THE EXISTING PAVEMENT. ANY LOOSE EXCAVATED MATERIAL WHICH FALLS ON PAVEMENTS OR DRIVEWAYS SHALL BE SWEPT BACK INTO THE EXCAVATED AREA.
3. CONTRACTOR SHALL CLEAN UP THE EXISTING STREET INTERSECTIONS AND DRIVEWAYS DAILY, AS NECESSARY, TO REMOVE ANY EXCESS MUD, SILT OR ROCK TRACKED FROM THE EXCAVATED AREA.
4. CONTRACTOR SHALL FOLLOW GOOD HOUSEKEEPING PRACTICES DURING THE CONSTRUCTION OF THE PROJECT, ALWAYS CLEANING UP DIRT AND LOOSE MATERIAL AS CONSTRUCTION PROGRESSES.
5. CONTRACTOR TO INSPECT AND MAINTAIN THE AREAS LISTED BELOW AT LEAST ONCE EVERY FOURTEEN (14) CALENDAR DAYS AND WITHIN 24 HOURS OF THE END OF A STORM EVENT OF 0.5 INCHES OR GREATER.
   - DISTURBED AREAS OF THE CONSTRUCTION SITE THAT HAVE NOT BEEN FINALLY STABILIZED.
   - AREAS USED FOR STORAGE OF MATERIALS THAT ARE EXPOSED TO PRECIPITATION.
   - STRUCTURAL CONTROL MEASURES.
   - LOCATIONS WHERE VEHICLES ENTER OR EXIT THE SITE.
7. CONTRACTOR TO BE RESPONSIBLE TO MAINTAIN EXISTING DITCHES AND OR CULVERTS FOR UNOBSTRUCTED DRAINAGE AT ALL TIMES. WHERE SODDING IS DISTURBED BY EXCAVATION ON BACKFILLING OPERATIONS, SUCH AREAS SHALL BE REPLACED BY SEEDING OR SODDING. SLOPES 4:1 OR STEEPER SHALL BE REPLACED BY BLOCK SODDING.
8. THE SITE SUPERINTENDENT, OR HIS REPRESENTATIVE, SHALL MAKE A VISUAL INSPECTION OF ALL SILTATION CONTROLS AND NEWLY STABILIZED AREAS ON A DAILY BASIS, ESPECIALLY AFTER A RAINFALL TO ENSURE THAT ALL CONTROLS ARE MAINTAINED AND PROPERLY FUNCTIONING. ANY DAMAGED CONTROLS SHALL BE REPAIRED PRIOR TO THE END OF THE WORK DAY, INCLUDING RE-SEEDING AND MULCHING OR RE-SODDING IF NECESSARY. ALL INSPECTIONS SHALL BE DOCUMENTED WITH A WRITTEN REPORT WITHIN 24 HOURS, WHICH MUST DETAIL ANY REPAIRS DEEMED NECESSARY. SUCH REPAIRS SHALL BE INITIATED WITHIN 24 HOURS OF THE REPORT.
9. ALL SEDIMENT TRAPPING DEVICES SHALL BE INSTALLED AS SOON AS PRACTICAL AFTER THE AREA HAS BEEN DISTURBED. ALL SEDIMENT TRAPPING DEVICES SHALL BE CLEANED WHEN THE SEDIMENT LEVEL REACHES 25% CAPACITY. SEDIMENT SHALL BE DISPOSED OF BY SPREADING ON SITE OR HAULING AWAY IF NOT SUITABLE FOR FILL.
10. SEDIMENT FENCE, HAY BALE BARRIERS, OR OTHER SEDIMENT TRAPPING DEVICES SHALL CONTROL ALL STORM WATER LEAVING THE WORK AREA. ALL FILL OR CUT AREAS SHALL BE HYDRO-MULCHED OR SODDED AS PER THE ENGINEERS' PLANS UPON COMPLETION OR WITHIN 14 DAYS OF SOIL DISTURBING ACTIVITIES.
11. THE CONTRACTOR SHALL SEED ALL AREAS WHEN SOIL-DISTURBING ACTIVITIES CEASE FOR A PERIOD OF MORE THAN 14 DAYS.
12. SILTATION CONTROL (AS SHOWN ON THE DETAIL SHEETS) WILL BE PROVIDED AT ALL STORM DRAIN INLETS ONCE THEY ARE ABLE TO CONVEY WATER. THE SILTATION CONTROL WILL BE REMOVED ONCE TURF IS ESTABLISHED.
13. CONTRACTOR SHALL HYDROMULCH SEED ALL DISTURBED AREAS. CONTRACTOR IS RESPONSIBLE FOR MAINTAINING SEEDING TILL 75% GERMINATION IS ESTABLISHED.
14. THE CONTRACTOR IS RESPONSIBLE FOR FILING A NOTICE OF INTENT A MINIMUM OF 48 HOURS PRIOR TO COMMENCING CONSTRUCTION.
15. THE CONTRACTOR IS RESPONSIBLE FOR FILING A NOTICE OF TERMINATION AT THE COMPLETION OF THE PROJECT.

REV	DATE	COMMENTS
1	2/9/26	TWDB COMMENTS
0	12/3/25	ORIGINAL

PREPARED FOR:
CITY OF IOLA
P.O. BOX 84
IOLA, TEXAS 77861
TPDES WQ0016021-001

BLEYL ENGINEERING
PLANNING • DESIGN • MANAGEMENT
1722 Broadmoor, Suite 210, Bryan Tx. 77802
Texas Firm Registration No. F-678
Tel. 979-268-1125 Fax 979-260-3849
www.bleylengineering.com
AUSTIN BRYAN CONROE HOUSTON

SWPPP DETAILS

CITY OF IOLA
0.100 MGD WASTEWATER TREATMENT PLANT
TWDB CWSRF PROJECT NO. 10422
GLO PROJECT NO. 24-065-165-F080

STATE OF TEXAS
STEVE E. DUNCAN
83252
LICENSED
PROFESSIONAL ENGINEER
2/9/2026

DESIGN: SED
CAD: JDR | RVW: SED
PROJECT NO: 12693
SHEET: C17

SDUNCAN 2/11/2026 7:40:24 AM
Z:\12600\12693 IOLA-TWDB WASTEWATER SYSTEM\04 CAD\CD-12693\WWTP PROJECT\15-16 DETAILS.DWG

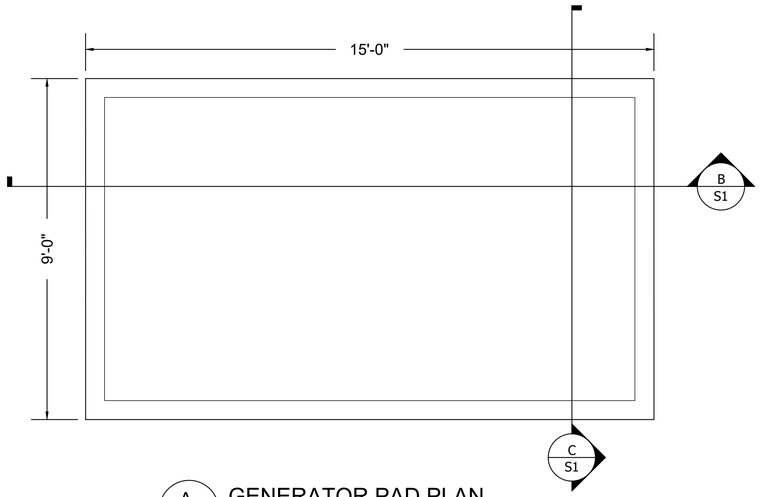

A S1 GENERATOR PAD PLAN
SCALE: 1/2"=1'-0"

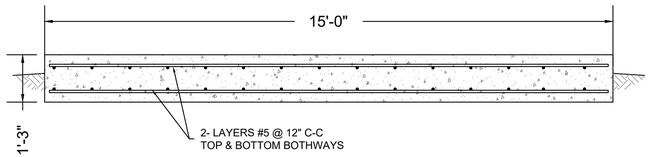

B S1 GENERATOR PAD SECTION B-B
SCALE: 1/2"=1'-0"

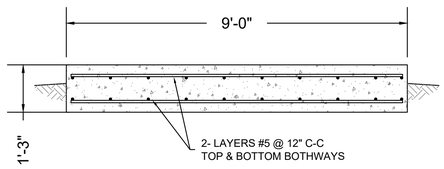

C S1 GENERATOR PAD SECTION C-C
SCALE: 1/2"=1'-0"

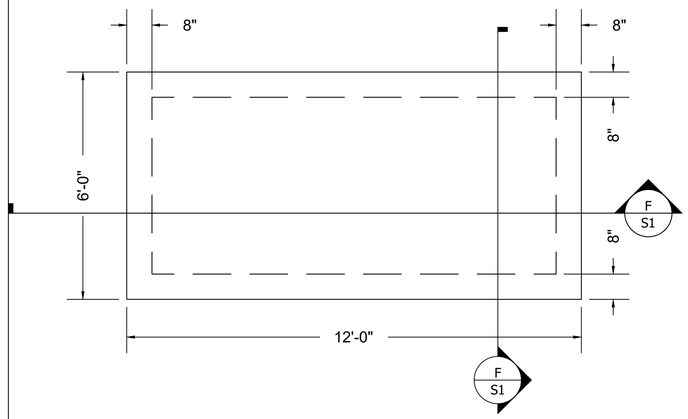

D S4 CHLORINE PAD PLAN
SCALE: 1/2"=1'-0"

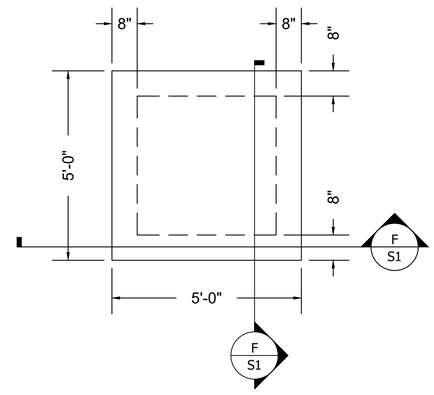

E S1 STAIR LANDING PLAN
SCALE: 1/2"=1'-0"

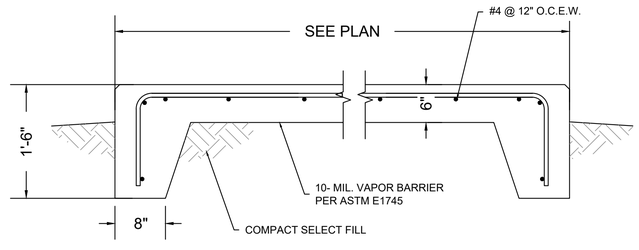

F S1 FOUNDATION PADS TYP. SECTION
SCALE: NTS

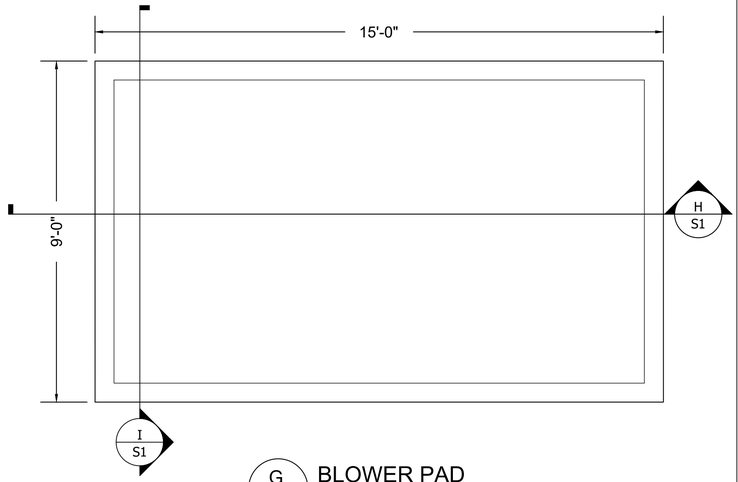

G S1 BLOWER PAD
SCALE: 1/2"=1'-0"

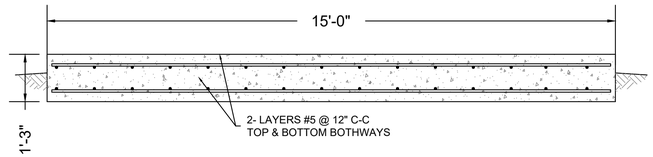

H S1 BLOWER PAD SECTION H-H
SCALE: 1/2"=1'-0"

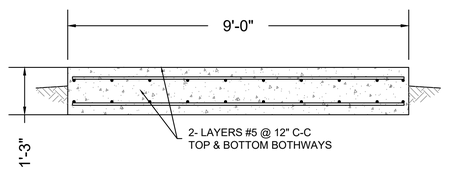

I S1 BLOWER PAD SECTION I-I
SCALE: 1/2"=1'-0"

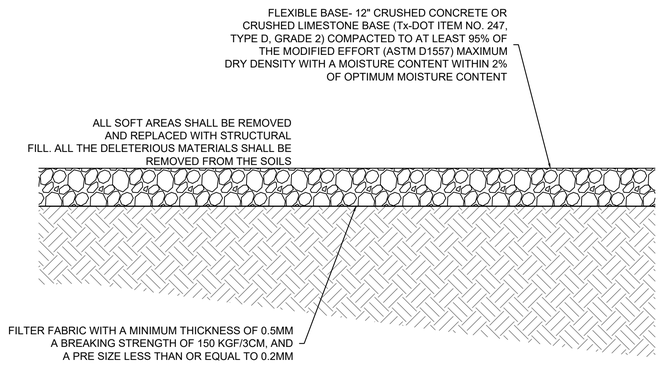

J S1 CRUSHED ROCK FOUNDATION DETAILS
SCALE: 1/2"=1'-0"

REV	DATE	BY	APP	COMMENT

CITY OF IOLA
P.O. BOX 84
IOLA, TEXAS 77861
TPDES WQ0016021-001

BLEYL ENGINEERING
PLANNING • DESIGN • MANAGEMENT
1722 Broadmoor, Suite 210, Bryan Tx 77802
Texas Firm Registration No. F-678
Tel. 979-268-1125 Fax 979-260-3849
www.bleylengineering.com
BRYAN CONROE HOUSTON AUSTIN

STRUCTURAL DETAILS 1

CITY OF IOLA
0.100 MGD WASTEWATER
TREATMENT PLANT
TWDB CWSRF PROJECT NO. 10422
GLO PROJECT NO. 24-065-165-F080

THE SEAL APPEARING ON THIS DOCUMENT WAS AUTHORIZED BY PAUL MALEK, P.E. 82860

STATE OF TEXAS · PAUL E. MALEK · 82860 · LICENSED PROFESSIONAL ENGINEER · 2/9/2026

DESIGN: PEM	
CAD: SAB	RVW: PEM
PROJECT NO:	12693
SHEET: S1	S3

SBISA
2/10/2026 9:56:03 AM
\\MBC_HQ_SERVER\MBC_SHARE\MBC PROJECTS\2025\25-0091 - BLEYL ENGINEERING - IOLA SEWER STRUCTURAL PLANS\DESIGN-CONSULTING\AUTOCAD\STRUCTURAL\R6 BLEYL-IOLA WWTP STRUCTURAL 2026-0209- (UPDATED BY STEVE DUNCAN).DWG ORIGINAL LAYOUT SIZE - 22X34

STRUCTURAL CONSTRUCTION NOTES

I. GENERAL
A. ALL FOUNDATION PLAN DIMENSIONS ARE INTERPRETED FROM AND SHALL BE VERIFIED WITH THE FLOOR PLAN AND THE OWNER NOTIFIED IF DISCREPANCIES EXIST.
B. A 10 mil. POLY VAPOR BARRIER SHALL BE PLACED ABOVE THE SOIL IN ORDER FOR IT TO MAINTAIN ITS NATURAL STATE. TEARS IN THE VAPOR BARRIER SHALL BE REPAIRED.

II. CONCRETE
A. ALL CONCRETE SHALL HAVE A MINIMUM COMPRESSIVE STRENGTH OF 3000 PSI AT 28 DAYS IN ACCORDANCE WITH ASTM C-39 AND SHALL HAVE AN APPROVED AIR ENTRAINMENT AGENT.
B. WHERE CONCRETE IS PLACED AGAINST FORMS OR SEALPS
C. SLABS, REINFORCING BARS SHALL HAVE A MINIMUM OF 2 INCHES CLEAR COVER UNLESS SHOWN OTHERWISE. WHERE CONCRETE IS PLACED AGAINST EARTH, REINFORCING BARS SHALL HAVE A MINIMUM OF 3 INCHES CLEAR COVER.
D. TOOL ALL EXPOSED EDGES UNLESS SHOWN OTHERWISE.
E. CONCRETE FACES SHALL NOT DEVIATE MORE THAN 3/16" FROM THE PLAN DIMENSIONS.

III. REINFORCING STEEL
A. ALL REINFORCING STEEL SHALL BE ASTM A-615, GRADE 60.
B. DETAILING OF REINFORCING SHALL BE IN ACCORDANCE WITH ACI 315, LATEST EDITION, UNLESS SHOWN OTHERWISE. PLACING OF REINFORCING SHALL BE IN ACCORDANCE WITH C.R.S.I.,"RECOMMENDED PRACTICE FOR PLACING OF REINFORCING BARS", LATEST EDITION.
C. BAR LAPS AND SPLICES LENGTH SHALL BE A MIN. OF 30 BAR DIAMETERS.
D. ALL REINFORCEMENT SHALL BE SUPPORTED WITH CHAIRS OR MASONRY BRIQUETTES AT NOT MORE THAN SIX FOOT ON CENTERS.
E. REINFORCING BARS SHALL BE SECURED AT EVERY OTHER INTERSECTION MINIMUM.
F. FOUR CORNER BARS SHALL BE SECURELY TIED TO THE INTERSECTION BEAM BARS AT ALL OUTSIDE CORNERS. THE CORNER BARS SHALL BE #5 BARS WITH 2'-0" LEGS.
G. WHERE SLOPED LOTS REQUIRE DEEPER BEAMS, ADDITIONAL BARS SHALL BE ADDED. BEAMS 3'-0" TO 5'-0" DEEP, TWO NO. 5 BARS SHALL BE ADDED AT MID DEPTH OF BEAM. BEAMS GREATER THAN 5'-0" DEEP THE ENGINEER SHALL BE CONTACTED FOR SPECIAL DESIGN DETAILS.

IV. STRUCTURAL SUBGRADE
A. THE TOTAL AREA OF THE FOUNDATION SHALL HAVE THE EXISTING VEGETATION SUBGRADE PROOF ROLLED PRIOR TO PLACEMENT OF ANY ADDITIONAL STRUCTURAL FILL. AREAS FOUND TO BE SUBSTANDARD SHALL BE REMOVED AND REPLACED AS DIRECTED BY THE OWNER.
B. ALL FILL PLACED UNDER THE FOUNDATION SLAB SHALL HAVE A MAXIMUM PLASTICITY INDEX OF 20 OR LESS. THE MINIMUM PLASTICITY INDEX SHALL BE 5. ALL FILL SHALL BE PLACED IN MAXIMUM LIFT THICKNESS OF SIX INCHES. EACH LIFT SHALL BE COMPACTED TO 95 % OF STANDARD PROCTOR DENSITY (ASTM D-698) AT A MOISTER CONTENT OF -1% TO +3% OF OPTIMUM. EXTEND 4 FT. PAST OUTSIDE FORMS

V. SUBSURFACE SOIL DESIGN PARAMETERS:
1. MINIMUM CLIMATIC RATING - 23
2. MINIMUM BEARING STRENGTH - 2000 psf
3. MAXIMUM PLASTICITY INDEX - 23
4. SUPPORT INDEX - 0.831

VI. MEMBERS AND CONNECTIONS:
1. HOT-ROLLED STRUCTURAL SHAPES: 36 ksi, ASTM A 36.
2. PLATE AND BAR STOCK MEMBERS: 42 ksi, ASTM A 529.
3. COLD FORMED MEMBERS: 50 ksi, ASTM A 607 (GRADE 50).
4. ROD BRACING: 36 ksi, ASTM A 36.
5. MISCELLANEOUS MEMBERS: 42 ksi.
6. PRIMARY BOLTED CONNECTIONS: ASTM A 325.
7. SECONDARY BOLTED CONNECTIONS: ASTM A 307.
8. SHOP CONNECTIONS: AWS STRUCTURAL WELDING CODE.

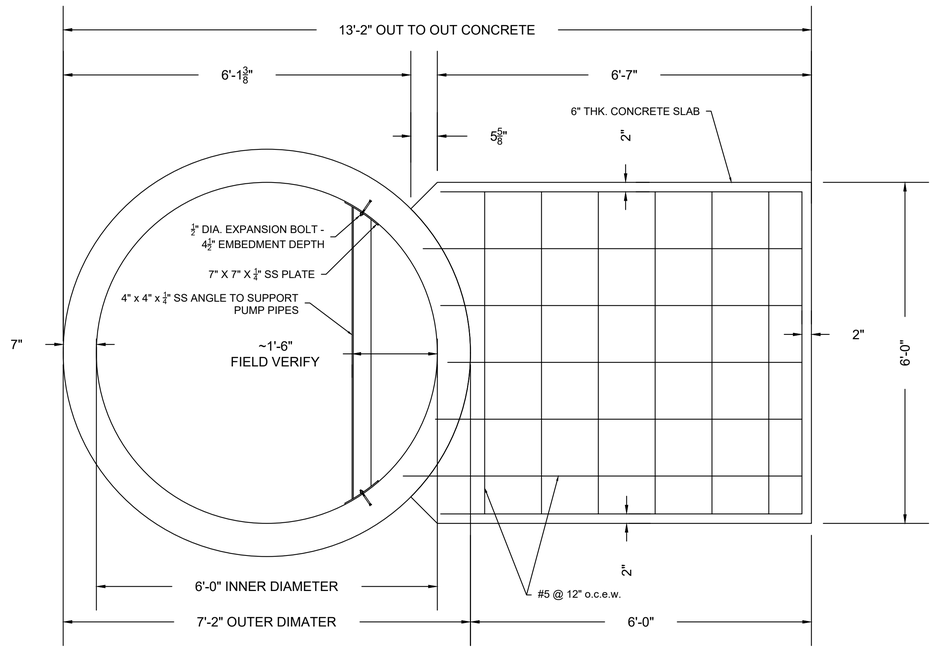

A S2 LIFT STATION STRUCTURAL PLAN
SCALE: 3/4"=1'-0"

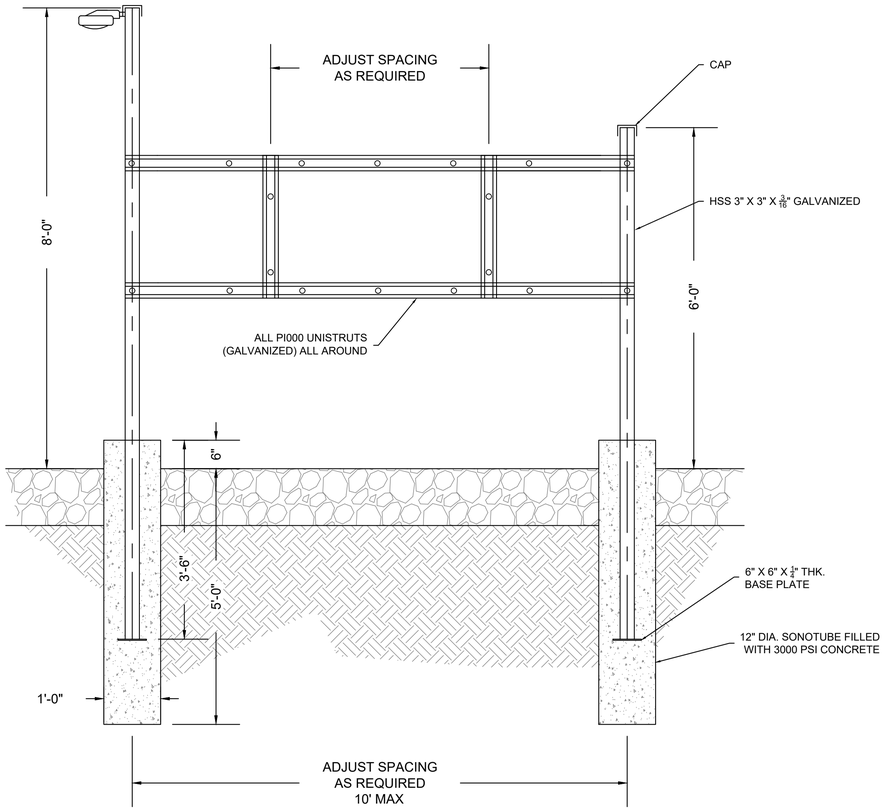

B S2 ELECTRICAL PANEL DETAILS
SCALE: NTS

REV	DATE	BY	APP	COMMENT

CITY OF IOLA
P.O. BOX 84
IOLA, TEXAS 77861
TPDES WQ0016021-001

BLEYL ENGINEERING
PLANNING • DESIGN • MANAGEMENT
1722 Broadmoor, Suite 210, Bryan Tx 77802
Texas Firm Registration No. F-678
Tel. 979-268-1125 Fax 979-260-3849
www.bleylengineering.com
AUSTIN BRYAN CONROE HOUSTON

STRUCTURAL DETAILS- 2

CITY OF IOLA
0.100 MGD WASTEWATER TREATMENT PLANT
TWDB CWSRP PROJECT NO. 10422
GLO PROJECT NO. 24-065-165-F080

THE SEAL APPEARING ON THIS DOCUMENT WAS AUTHORIZED BY PAUL MALEK, P.E. 82860

STATE OF TEXAS · PAUL E. MALEK · 82860 · LICENSED PROFESSIONAL ENGINEER · 2/9/2026

DESIGN: PEM	
CAD: SAB	RVW: PEM
PROJECT NO:	12693
SHEET: S2	S3

SBISA
2/10/2026 9:56:03 AM
\\MBC_HQ_SERVER\MBC_SHARE\MBC PROJECTS\2025\25-0091 - BLEYL ENGINEERING - IOLA SEWER STRUCTURAL PLANS\DESIGN-CONSULTING\AUTOCAD\STRUCTURAL\R6 BLEYL-IOLA WWTP STRUCTURAL 2026-0209- (UPDATED BY STEVE DUNCAN).DWG ORIGINAL LAYOUT SIZE - 22X34

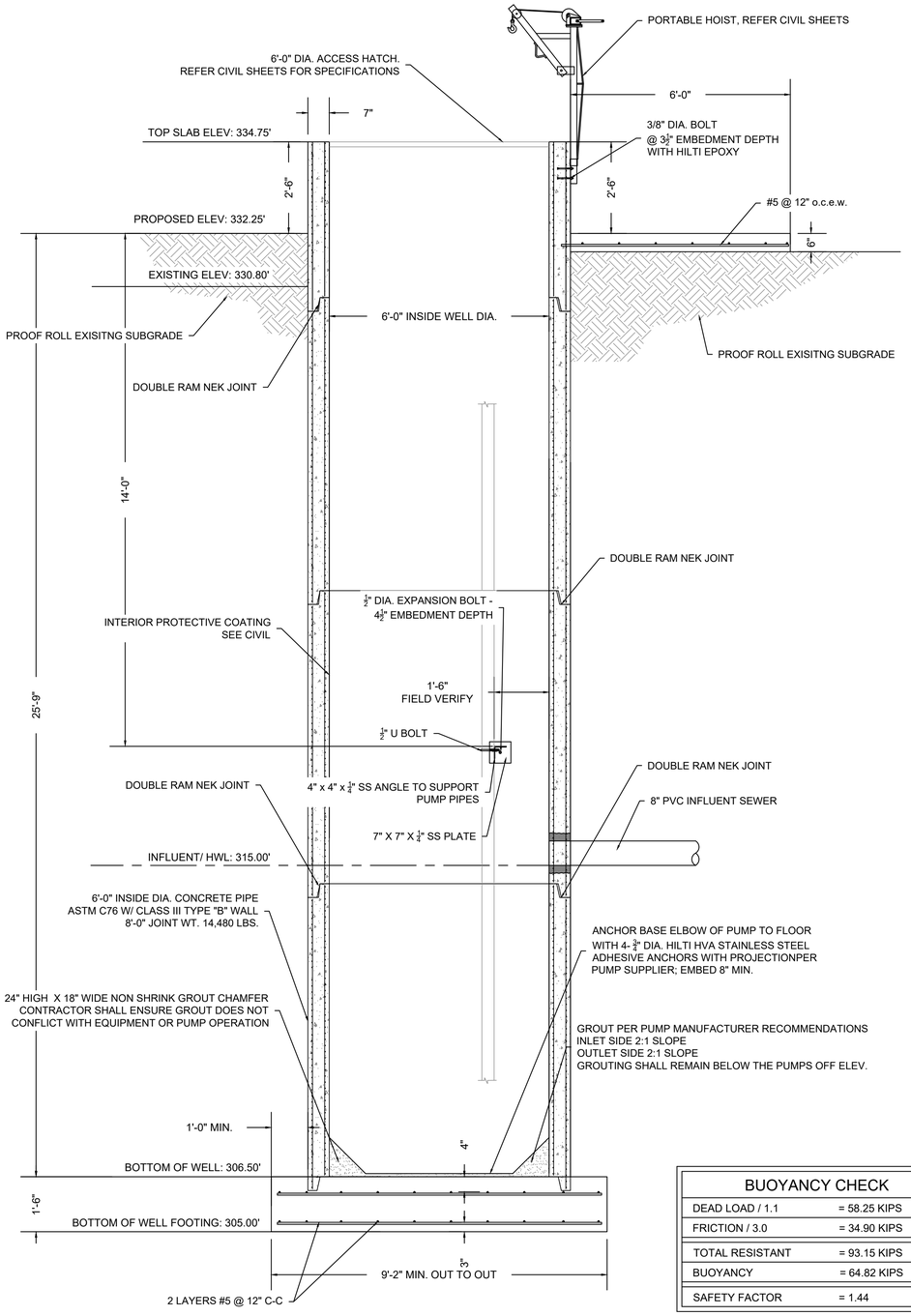

BUOYANCY CHECK	
DEAD LOAD / 1.1	= 58.25 KIPS
FRICTION / 3.0	= 34.90 KIPS
TOTAL RESISTANT	= 93.15 KIPS
BUOYANCY	= 64.82 KIPS
SAFETY FACTOR	= 1.44

A S3 LIFT STATION STRUCTURAL SECTION (OPEN- CUT METHOD)
SCALE: 1/2"=1'-0"

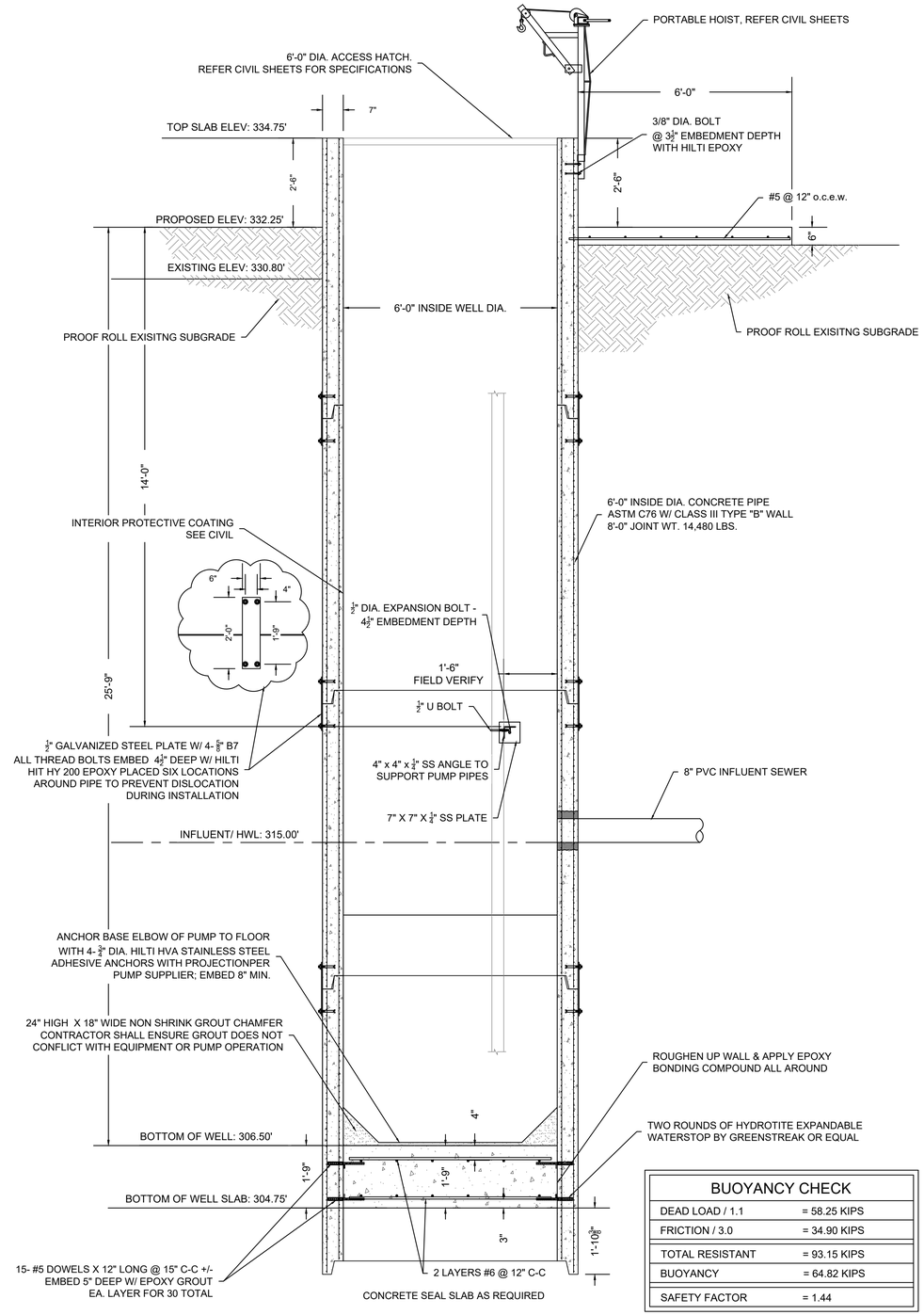

BUOYANCY CHECK	
DEAD LOAD / 1.1	= 58.25 KIPS
FRICTION / 3.0	= 34.90 KIPS
TOTAL RESISTANT	= 93.15 KIPS
BUOYANCY	= 64.82 KIPS
SAFETY FACTOR	= 1.44

B S3 LIFT STATION STRUCTURAL SECTION (CAISSON METHOD)
SCALE: 1/2"=1'-0"

REV	DATE	BY	APP	COMMENT

CITY OF IOLA
P.O. BOX 84
IOLA, TEXAS 77861
TPDES WQ0016021-001

BLEYL ENGINEERING
PLANNING • DESIGN • MANAGEMENT
1722 Broadmoor, Suite 210, Bryan Tx 77802
Texas Firm Registration No. F-678
Tel. 979-268-1125 Fax 979-260-3849
www.bleylengineering.com
BRYAN CONROE HOUSTON AUSTIN

LIFT STATION SECTIONS

CITY OF IOLA
0.100 MGD WASTEWATER
TREATMENT PLANT
TWDB CWSRF PROJECT NO. 10422
GLO PROJECT NO. 24-065-165-F080

THE SEAL APPEARING ON THIS DOCUMENT WAS AUTHORIZED BY PAUL MALEK, P.E. 82860

DESIGN: PEM	
CAD: SAB	RVW: PEM
PROJECT NO:	12693
SHEET: S3	S3

SBISA
\\MBC_HQ_SERVER\MBC_SHARE\MBC PROJECTS\2025\25-0091 - BLEYL ENGINEERING - IOLA SEWER STRUCTURAL PLANS\DESIGN-CONSULTING\AUTOCAD\STRUCTURAL\R6 BLEYL-IOLA WWTP STRUCTURAL 2026-0209- (UPDATED BY STEVE DUNCAN).DWG
2/10/2026 9:56:03 AM
ORIGINAL LAYOUT SIZE - 22X34

ORIGINAL LAYOUT SIZE – 22X34

ELECTRICAL PLAN LEGEND

SYMBOL	DESCRIPTION
	ABOVE GROUND CONDUIT
	UNDERGROUND CONDUIT
GND	GROUND CONDUCTOR
	GROUND WELL
	FLOODLIGHT
$	20A, LIGHT SWITCH IN WEATHER–PROOF FS BOX
PE	PHOTO ELECTRIC SWITCH
PS	PRESSURE SWITCH
FIT	FLOW INDICATING TRANSMITTER
TIT	TEMPERATURE INDICATING TRANSMITTER
WP GFCI	20A, 125V, GFI RECEPTACLE IN WEATHER PROOF WHILE–IN–USE COVER
240V	20A, 240V, RECEPTACLE
J	JUNCTION BOX
R	ALARM BEACON
	WEATHERHEAD
XXX–XXX	CONDUIT MARKER (SEE CONDUIT SCHEDULE SHEET 31)

ONE–LINE DIAGRAM LEGEND

SYMBOL	DESCRIPTION	SYMBOL	DESCRIPTION
100AF 2P 50AT	MOLDED CASE CIRCUIT BREAKER		OILER HEATER WITH THERMOSTAT
	STARTER (SIZE NOTED)	MTS	MOTOR WINDING THERMOSTAT
HP	THREE–PHASE MOTOR (HORSEPOWER NOTED)		POWER FACTOR CORRECTION CAPACITOR
	ELECTRICAL GROUND	M	POWER QUALITY MONITOR
PFR	PHASE FAILURE RELAY	N/G	NEUTRAL/GROUND BOND
PS	PRESSURE SWITCH	ETM	ELAPSED TIME METER
OS	OILER SOLENOID	G	INDICATING LIGHT (COLOR AS SHOWN: G=GREEN, R=RED, A=AMBER, B=BLUE, W=WHITE
TIT	TEMPERATURE INDICATING TRANSMITTER	HOA	HAND–OFF–AUTO SWITCH
LS	LOCAL LOCK STOP		
TS	TEMPERATURE SWITCH	OA	OFF–AUTO SWITCH
VS	VIBRATION SWITCH		
	FLOW METER	TD	TIME DELAY RELAY
SPD	SURGE PROTECTIVE DEVICE	XXX–XXX	CONDUIT MARKER (SEE CONDUIT SCHEDULE SHEET E2)
	MOTOR SPACE HEATER		
1	SPECIAL DEVICE (SEE SCHEDULE THIS SHT)	▲	ITEM LOCATED ON LIFT STATION CONTROL PANEL SWING–OUT PANEL
SSOL	SOLID STATE OVERLOAD		

CONTROL DIAGRAM LEGEND

SYMBOL	DESCRIPTION
100AF 2P 50AT	MOLDED CASE CIRCUIT BREAKER
	SELECTOR SWITCH
	PUSH BUTTON
CR/TD	CONTROL/ TIME–DELAY RELAY – PLUG IN
CR CR	RELAY CONTACT (NORMALLY OPEN – NORMALLY CLOSED)
TD	TIME–DELAY RELAY CONTACT
M	MOTOR STARTER COIL
OL	MOTOR OVERLOAD
ETM	ELAPSED TIME METER
G	INDICATING LIGHT – LED TYPE – PUSH–TO–TEST (COLOR AS SHOWN: G=GREEN, R=RED, A=AMBER, B=BLUE, W=WHITE
	MOTOR SPACE HEATER
TS	TEMPERATURE SWITCH
FS	FLOAT SWITCH
A	SPECIAL DEVICE (SEE SCHEDULE THIS SHEET)
▲	ITEM LOCATED ON CONTROL PANEL SWING–OUT PANEL

ABBREVIATIONS

#PDT – # POLE, DOUBLE THROW; WHERE # IS # OF POLES (S=SINGLE, D=DOUBLE)
A – AMPS OR AMPERES
ASP – AUTOSENSORY PANEL
BC – BARE COPPER
C – CONDUIT
CC – COPPER CLAD
CGB – CABLE GLAND BUSHING
CLR – CLEARANCE
CR – CONTROL RELAY
DTL – DETAIL
E.C. – EMPTY CONDUIT
ETM – ELAPSED TIME METER
EW – EACH WAY
FG – FINISHED GRADE
FIN – FINISHED (AS IN FINISHED GRADE)
G; GND – GROUND
HDG – HOT DIPPED GALVANIZED
HTR – HEATER
M – MOTOR
MIN – MINIMUM
MLO – MAIN LUGS ONLY
MSH – MOTOR SPACE HEATER
NEMA – NATIONAL ELECTRICAL MANUFACTURERS ASSOCIATION
N; NEU – NEUTRAL
NG – NEUTRAL/GROUND BOND
NTS – NOT TO SCALE
OC – OFF CENTER
OL – OVERLOAD
P – POLES
PFCC – POWER FACTOR CORRECTION CAPACITOR
PROP – PROPOSED
PVC – POLYVINYL CHLORIDE
RGS – RIGID GALVANIZED STEEL
SCH – SCHEDULE
SHT – SHEET
SPD – SURGE PROTECTIVE DEVICE
S.S.; STN STL – STAINLESS STEEL
TD – TIME DELAY RELAY
TYP – TYPICAL
V – VOLT/VOLTAGE
W/ – WITH
WIU – WHILE IN USE
WP – WEATHERPROOF OR WEATHER PROTECTED
GFCI – GROUND FAULT CIRCUIT INTERRUPTER

GENERAL NOTES:

1. ALL CONSTRUCTION SHALL COMPLY WITH LOCAL AND NATIONAL CODES AND REQUIREMENTS.
2. CONDUITS SHALL NOT BE ROUTED ACROSS WALKWAYS, PATHS OF ACCESS, TRAVEL, OR EGRESS. ROUTE BENEATH GRATINGS, IN CONCRETE STRUCTURES, OR AROUND EQUIPMENT. DO NOT ROUTE IN CONFLICT WITH OTHER PIPING, CONDUITS, EQUIPMENT, OR STRUCTURES.
3. CONDUITS SHOWN ARE FOR SIGNIFICANT PIECES OF ELECTRICAL EQUIPMENT AND IN A DIAGRAMMATICAL ORIENTATION FOR CLARITY. INSTALL ALL CONDUITS AND CONDUCTOR SPECIFIED IN OTHER ELECTRICAL SCHEMATICS, SCHEDULES, SPECIFICATIONS, AND AS REQUIRED FOR VENDOR SUPPLIED EQUIPMENT. ROUTE CONDUITS THE BEST WAY TO MINIMIZE BENDS.
4. CONTRACTOR SHALL BE RESPONSIBLE FOR OBTAINING ANY AND ALL PERMITS ASSOCIATED WITH THE WORK. THE COSTS OF THE PERMITS, IF ANY, SHALL BE BORNE BY THE CONTRACTOR.
5. ALL ASPECTS OF THIS INSTALLATION MUST COMPLY WITH THE LATEST UTILITY CO. STANDARDS. REVIEW THIS PROJECT'S SERVICE REQUIREMENTS OF LOCATION, RATINGS, AND METHODS WITH POWER COMPANY PRIOR TO BEGINNING CONSTRUCTION. CONTRACTOR IS RESPONSIBLE FOR ALL COORDINATION WITH UTILITY COMPANY.
6. ALL POWER AND ANALOG INSTRUMENTATION CONDUCTORS SHALL BE INSTALLED IN SEPARATE CONDUITS.
7. ALL RECEPTACLES INSTALLED OUTDOORS AND INDOOR RECEPTACLES MARKED AS "WPWIU" ON THE PLANS SHALL BE GFI TYPE WITH METAL WEATHERPROOF WHILE–IN–USE COVERS.
8. ALL EXTERIOR ABOVE GRADE CONDUIT INSTALLED OUTDOORS AND OTHER WET AND OR CORROSIVE AREAS SHALL BE RIGID ALUMINUM CONDUIT WITH ALUMINUM MOUNTING HARDWARE. CONDUITS WITHIN CHEMICAL ROOMS SHALL BE SCH 40 PVC. FITTINGS/BOXES IN CHEMICAL ROOMS SHALL BE INSTALLED WITH CARLON PLASTIC HARDWARE. CONDUITS INSTALLED IN CLIMATE CONTROLLED AREAS SHALL BE RIGID GALVANIZED CONDUIT WITH GALVANIZED MOUNTING HARDWARE.
9. THIS CONTRACT INCLUDES FIELD INSTALLATION AND COMPLETION OF VENDOR SUPPLIED COMPONENTS. CONDUIT, WIRE, MOTORS, INSTRUMENTATION, AND CONTROLS SHOWN ARE TYPICAL. ALL DRIVE MOTORS, ALARM CONTACTS, RUN LIGHTS, ETC. ARE TO BE WIRED TO THE VENDOR'S PANEL OR SITE MOTOR CONTROLS AS REQUIRED. CONTRACTOR SHALL VERIFY VENDOR SUPPLIED COMPONENTS AND PROVIDE A COMPLETE AND OPERATING SYSTEM.
10. PROVIDE TRADITIONAL "NEMA" DEVICES AS DEFINED IN NEMA STANDARDS PUBLICATION NO. ICS 2.4.2003. IEC COMPONENTS ARE NOT ALLOWED.
11. SEE SPECIFICATIONS FOR WIRE TYPES.

REV	DATE	BY	APP	COMMENT

CITY OF IOLA
P.O. BOX 84
IOLA, TEXAS 77861
TPDES WQ0016021–001

BLEYL ENGINEERING
PLANNING • DESIGN • MANAGEMENT
1722 Broadmoor, Suite 210, Bryan Tx. 77802
Texas Firm Registration No. F–678
Tel. 979–268–1125 Fax 979–260–3849
www.bleylengineering.com
AUSTIN BRYAN CONROE HOUSTON

ELECTRICAL LEGENDS, SCHEDULES, AND NOTES

CITY OF IOLA
0.100 MGD WASTEWATER TREATMENT PLANT

TWDB CWSRF PROJECT NO. 10422

STATE OF TEXAS
SHANE R. MECKE
124906
LICENSED PROFESSIONAL ENGINEER
12/3/25

BAIRD GILROY & DIXON
ELECTRICAL ENGINEERS
9711 S. Mason Rd.
Ste. 125 #326
Richmond, TX 77407
(281) 529–5005
www.bgdeng.com
TBPE No. F–16575
Job No. 103–0153

DESIGN: CDM	
CAD: CDM	RVW: SRM
PROJECT NO:	12693
SHEET: E1	OF: E13

COLEMCMILLIN 12/1/2025 6:35:54 PM
P:\PROJECTS\103-BLEYL\0153-IOLA WASTEWATER SYSTEM\03 CAD\103-0153 ELEC.DWG

ORIGINAL LAYOUT SIZE – 22X34

CONDUIT SCHEDULE

NO.	SIZE & CONDUCTORS	FROM	TO	DESCRIPTION
BL-001	1" C, W/3-#6 + #10 GND	MAIN DISTRIBUTION PANELBOARD "MDP"	BLOWER NO. 1 CONTROL PANEL	BLOWER NO. 1 CONTROL PANEL FEEDER
BL-002	1" C, W/3-#6 + #10 GND	MAIN DISTRIBUTION PANELBOARD "MDP"	BLOWER NO. 2 CONTROL PANEL	BLOWER NO. 2 CONTROL PANEL FEEDER
BL-003	1" C, W/3-#6 + #10 GND	MAIN DISTRIBUTION PANELBOARD "MDP"	BLOWER NO. 3 CONTROL PANEL	BLOWER NO. 3 CONTROL PANEL FEEDER
BL-100	1" C, W/3-#8 +2-#12 + #10 GND	BLOWER CONTROL PANEL	BLOWER NO. 1	BLOWER NO. 1 POWER & MSH
BL-200	1" C, W/3-#8 +2-#12 + #10 GND	BLOWER CONTROL PANEL	BLOWER NO. 2	BLOWER NO. 2 POWER & MSH
BL-300	1" C, W/3-#8 +2-#12 + #10 GND	BLOWER CONTROL PANEL	BLOWER NO. 3	BLOWER NO. 3 POWER & MSH
BLA-010	1" C, W/2-#14 + #12 GND	LIFT STATION CONTROL PANEL	AIR HEADER PRESSURE SWITCH	AIR HEADER LOW PRESSURE ALARM
CL-001	1" C, W/3-#10 + #12 GND	MAIN DISTRIBUTION PANELBOARD "MDP"	CLARIFIER NO. 1 CONTROL PANEL	CLARIFIER NO. 1 CONTROL PANEL FEEDER
CL-020	1" C, W/4-#14 + #12 GND	CLARIFIER NO. 1 CONTROL PANEL	LIFT STATION CONTROL PANEL	CLARIFIER NO. 1 ALARMS
CL-100	1" C, W/3-#12 + #12 GND	CLARIFIER NO. 1 CONTROL PANEL	CLARIFIER NO. 1	CLARIFIER NO. 1 POWER
CL-101	1" C, W/4-#14 + #12 GND	CLARIFIER NO. 1 CONTROL PANEL	CLARIFIER NO. 1 TORQUE SWITCH	CLARIFIER NO. 1 TORQUE SIGNALS
EFM-010	1" C, W/2-#12 +#12 GND	LIGHTING PANEL "LP-B"	EFFLUENT FLOWMETER	EFFLUENT FLOWMETER POWER
EFM-011	1" C, W/2-#16 SH. PR. + #12 GND	EFFLUENT FLOWMETER	DISINFECTION BUILDING	EFFLUENT FLOW SIGNAL
FL-001	1" C, W/4-#10 + #10 GND	LIGHTING CONTROL PANEL	BASIN LIGHTS & RECEPTACLES	BASIN LIGHTS & RECEPTACLES
FL-002	1" C, W/4-#10 + #10 GND	LIGHTING CONTROL PANEL	BASIN LIGHTS & RECEPTACLES	BASIN LIGHTS & RECEPTACLES
FL-003	1" C, W/2-#12+ #10 GND	LIGHTING CONTROL PANEL	EQUIPMENT RACK FLOODLIGHT	FLOODLIGHT
G-001	2 1/2" C, W/3-4/0 KCMIL + #2 NEU + #2 GND	GENERATOR	ATS	EMERGENCY POWER
G-002	1 1/2" C, W/10-#14 + VENDOR CABLES	GENERATOR	ATS	GENERATOR SIGNALS
G-003	1" C, W/ANNUNCIATOR CABLE	GENERATOR	ATS	ANNUNCIATOR
G-004	1" C, W/8-#10 + #10 GND	GENERATOR	LIGHTING PANEL "LP-A"	GENERATOR MISC. POWER
G-005	1" C, W/10-#14 + #12 GND	ATS	LIFT STATION CONTROL PANEL	GENERATOR ALARMS
LPA-001	1" C, W/2-#8 + #8 NEU + #10 GND	MAIN DISTRIBUTION PANELBOARD "MDP"	LIGHTING TRANSFORMER	LIGHTING TRANSFORMER FEEDER
LPA-002	1 1/4" C, W/2-#4 + #4 NEU + #4 GND	LIGHTING TRANSFORMER	LIGHTING PANEL "LP-A"	LIGHTING PANEL "LP-A" FEEDER
LPA-003	1" C, W/4-#12 + #12 GND	LIGHTING PANEL "LP-A"	LIGHTING CONTROL ENCLOSURE	LIGHTING CONTROLS
LPB-001	1" C, W/2-#8 + #8 NEU + #10 GND	LIGHTING PANEL "LP-A"	LIGHTING PANEL "LP-B"	LIGHTING PANEL "LP-B" FEEDER
LS-001	1" C, W/8-#10 + #10 GND	MAIN DISTRIBUTION PANELBOARD "MDP"	LIFT STATION CONTROL PANEL	LIFT STATION CONTROL PANEL FEEDER
LS-100	3" C, W/SUBMERSIBLE CABLE	LIFT STATION CONTROL PANEL	LIFT PUMP NO. 1	LIFT PUMP NO. 1 POWER
LS-200	3" C, W/SUBMERSIBLE CABLE	LIFT STATION CONTROL PANEL	LIFT PUMP NO. 2	LIFT PUMP NO. 2 POWER
LS-300	3" C, W/SUBMERSIBLE CABLE	LIFT STATION CONTROL PANEL	LIFT PUMP NO. 3	LIFT PUMP NO. 3 POWER
LS-900	2" C, W/3-FLOAT CABLES	LIFT STATION CONTROL PANEL	WET WELL	FLOAT SIGNALS
LS-901	2" C, W/3-FLOAT CABLES	LIFT STATION CONTROL PANEL	WET WELL	FLOAT SIGNALS
P-001	2 1/2" C, W/3-4/0 KCMIL + #2 NEU + #2 GND	POWER CO. TRANSFORMER	UTILITY CO. METER	UTILITY POWER
P-002	2 1/2" C, W/3-4/0 KCMIL + #2 NEU + #2 GND	UTILITY CO. METER	MAIN DISCONNECT	UTILITY POWER
P-003	2 1/2" C, W/3-4/0 KCMIL + #2 NEU + #2 GND	MAIN DISCONNECT	ATS	UTILITY POWER
P-004	2 1/2" C, W/3-4/0 KCMIL + #2 NEU + #2 GND	ATS	MAIN DISTRIBUTION PANELBOARD "MDP"	MAIN DISTRIBUTION PANELBOARD FEEDER

SPECIAL DEVICE SCHEDULE

ITEM	DESCRIPTION
AD	CELLULAR AUTODIALER – 14–CHANNELS, 120 VAC, 4G LTE, 14 DISCRETE INPUTS, MODEL: OMNISITE CRYSTAL BALL
CF	CABINET FAN – HOFFMAN CAT NO. A–PA4AXFN, 21 WATT, 120V (WITH RAIN SHIELD GRILLE)
CH	CABINET HEATER – HOFFMAN CAT NO. DAH1001A, 115 VAC, 100 WATT
CR	CONTROL RELAY – WITH 4 S.P.D.T. SWITCHES RATED 10 AMPS AT 120 VOLT, COIL VOLTAGE AS REQUIRED, PLUG IN BASE AND SOCKET
DA	DUPLEX ALTERNATOR – ALTERNATE TWO LOADS IN A LEAD/LAG SEQUENCE OR LOCK OPERATING SEQUENCE WITH TOGGLE SWITCH, 120 VOLT, 10A CONTACTS AT 120V, LED INDICATING LIGHTS, TIME MARK MODEL 2611 OR EQUAL
EG	EXHAUST GRILLE – HOFFMAN CAT NO. A–VK66 LOUVER WITH CAT NO. A–FLT66 FILTER K.T. (WITH RAIN SHIELD GRILLE)
ETM	ELAPSED TIME METER – CRAMER #653S, 120 VOLT
FS	FLOAT SWITCH – DIRECT ACTING FLOAT SWITCH WITH 50 FOOT CABLE – SIEMENS MODEL 9G OR ANCHOR SCIENTIFIC ROTO–FLOAT–S
H	VIBRATING PANEL MOUNT HORN – NEMA 4X, 120 VOLT – EDWARDS MODEL NO. 870P–N5
ISR	INTRINSICALLY SAFE RELAY – DIVERSIFIED ELECTRONICS CAT NO. ISO–120–AFN LOW CURRENT ISOLATION SWITCH, 5 AMPS, 120 VOLT CONTACTS
LC	LIGHTING CONTACTOR – ELECTRICALLY HELD, 30A CONTACTS, MINIMUM 3 POLES
LT	LED PUSH–TO–TEST INDICATING LIGHT – 30MM HEAVY DUTY OILTIGHT/WATERTIGHT, VOLTAGE AS REQUIRED, 60HZ – COLOR AS INDICATED
PC	PUMP CONTROLLER – HYDRORANGER WITH ULTRASONIC TRANSDUCER OR APPROVED EQUAL
PE	PHOTOELECTRIC SWITCH – INTERMATIC SERIES K1100, 120V – MODEL NO. K1121
PFR	PHASE FAILURE RELAY – MACROMATIC PMDU, 480 VOLT, THREE–PHASE
PPM	PUMP PROTECTION MODULE – BEARING TEMPERATURE ALARM, INDICATION, AND PROTECTION AS SHOWN AND PER MANUFACTURER'S REQUIREMENTS
PSB	PRESSURE SWITCH – MERCOID SERIES DA, MODEL NO. DAW–33–153–1, 1/8–15 PSI RANGE, WEATHER–PROOF, AUTOMATIC RESET, ONE (1) S.P.D.T. SWITCHES RATED 5 AMPS AT 120 VOLTS
SPD	SURGE PROTECTION DEVICE – UL 1449, STATUS INDICATING LIGHTS, MOV TYPE SURGE ARRESTOR; RATED 50,000 AMPS PROTECTION MINIMUM
TD	TIME DELAY RELAY – WITH 2 S.P.D.T. SWITCHES RATED 7 AMPS AT 120 VOLT, CONTACTS AND COIL, PLUG IN BASE AND SOCKET, 3 RANGES, 0.1 TO 100 SEC, ATC MODEL No. 319D–134

LIGHT FIXTURE SCHEDULE

TYPE	MANUFACTURER & MODEL NUMBER	VOLTAGE	INPUT POWER	MOUNTING	LAMP NO.	LAMP TYPE	REMARKS
A	LITHONIA STL2 40L LP840	120	39W	SURFACE MOUNT	1	LED 4,000K 3,796LUMENS	4' STRIP LED
B	LITHONIA FEM4LED IMAFL & PLCL	120	61W	STEM HANG 6"	1	LED 4,000K 4,000 LUMENS	4' STRIP LED ENCLOSED & GASKETED W/ POLYCARBONATE LATCHES
C	LITHONIA TWP LED 10C 50K	120	26W	WALL MOUNT	1	LED 5,000K 2,200 LUMENS	WALL PACK, MOUNT 9' ABOVE FINISHED GRADE
FL–1	LITHONIA DSXF2 LED 4 50K FL 120, DSXF1/2TS, VG, & UBV	120	74W	SLIP–FITTER	1	LED 5,000K 7,749 LUMENS	D–SERIES W/VANDAL SHIELD & UPPER VISOR (SEE DETAIL SHT E2)
FL–2	APPLETON MLLEDS25J5BU, KRG2, & CMR–4AN	120	26W	25' STANCHION	1	LED 5,700K 2,200 LUMENS	ENCLOSED AND GASKETED LOW PROFILE LED FIXTURE WITH GLASS REFRACTOR, GUARD, AND REFLECTOR

PROP PANEL LP-A

(L-L) VOLT: 240 V **BUSS:** 125 A
(L-N) VOLT: 120 V **MCB:** 80 A
PHASE: 1 Ø **MLO:** N/A
WIRE: 3-W

ENCLOSURE: NEMA 3R
LOCATION: EQUIP. RACK
SURGE PROTECTOR: 100 KA
KAIC: 14 KA

DESCRIPTION	LOAD (VA)	BRKR	CKT	A	B	CKT	BRKR	LOAD (VA)	DESCRIPTION
LIGHTING CONTROLS	250	40/2	1	A		2	20/1	720	BASIN RECEPTACLES
BASIN LIGHTS	104	40/2	3		B	4	20/2	500	GENERATOR JWH
AUTODIALER	250	20/1	5	A		6	20/2	500	GENERATOR JWH
GENERATOR BATTERY CHARGER	720	20/1	7		B	8	20/1	150	GENERATOR CONTROLS HEATER
GENERATOR ALT HEATER	300	20/1	9	A		10	20/1	1,160	LP-B FEEDER
SERVICE AREA LIGHTS	80	20/1	11		B	12	20/1	200	LP-B FEEDER
SPARE		20/1	13	A		14	20/1	600	BLOWER SPACE HEATERS
SPARE		20/1	15		B	16	20/1		SPARE
SPARE		20/1	17	A		18	20/1		SPARE
SPARE		20/1	19		B	20	20/1		SPARE
SPARE		20/1	21	A		22	20/1		SPARE
SPARE		20/1	23		B	24	20/1		SPARE

CONNECTED LOAD
PHASE A: 3,780 VA 31.5 A
PHASE B: 1,754 VA 14.6 A
TOTAL LOAD: 5,534 VA 23.1 A

NOTE:
ADJUST CIRCUITS TO BALANCE PANEL. CONNECTED LOAD IS ESTIMATED FROM AVAILABLE INFORMATION. TOTAL LOAD CALCULATION ASSUMES BALANCED

REV	DATE	BY	APP	COMMENT

CITY OF IOLA
P.O. BOX 84
IOLA, TEXAS 77861
TPDES WQ0016021-001

BLEYL ENGINEERING
PLANNING • DESIGN • MANAGEMENT
1722 Broadmoor, Suite 210, Bryan Tx. 77802
Texas Firm Registration No. F-678
Tel. 979-268-1125 Fax 979-260-3849
www.bleylengineering.com
BRYAN CONROE HOUSTON AUSTIN

ELECTRICAL CONDUIT SCHEDULE

CITY OF IOLA
0.100 MGD WASTEWATER TREATMENT PLANT
TWDB CWSRF PROJECT NO. 10422

STATE OF TEXAS
SHANE R. MECKE
124906
LICENSED PROFESSIONAL ENGINEER
12/3/25

BAIRD GILROY & DIXON
ELECTRICAL ENGINEERS
9711 S. Mason Rd.
Ste. 125 #326
Richmond, TX 77407
(281) 529-5005
www.bgdeng.com
TBPE No. F-16575
Job No. 103-0153

DESIGN: CDM
CAD: CDM RVW: SRM
PROJECT NO: 12693
SHEET: E2 OF: E13

COLEMCMILLIN 12/3/2025 6:35:55 PM
P:\PROJECTS\103-BLEYL\0153-IOLA WASTEWATER SYSTEM\03 CAD\103-0153 ELEC.DWG

ORIGINAL LAYOUT SIZE – 22X34

NOTES:

1. MOUNT FLOWMETER ENCLOSURE NEAR BASIN OUTFALL MOUNT FLOWMETER OVER V–NOTCH WEIR.

N

0 2.5 5 10 15

SCALE: 1" = 5'

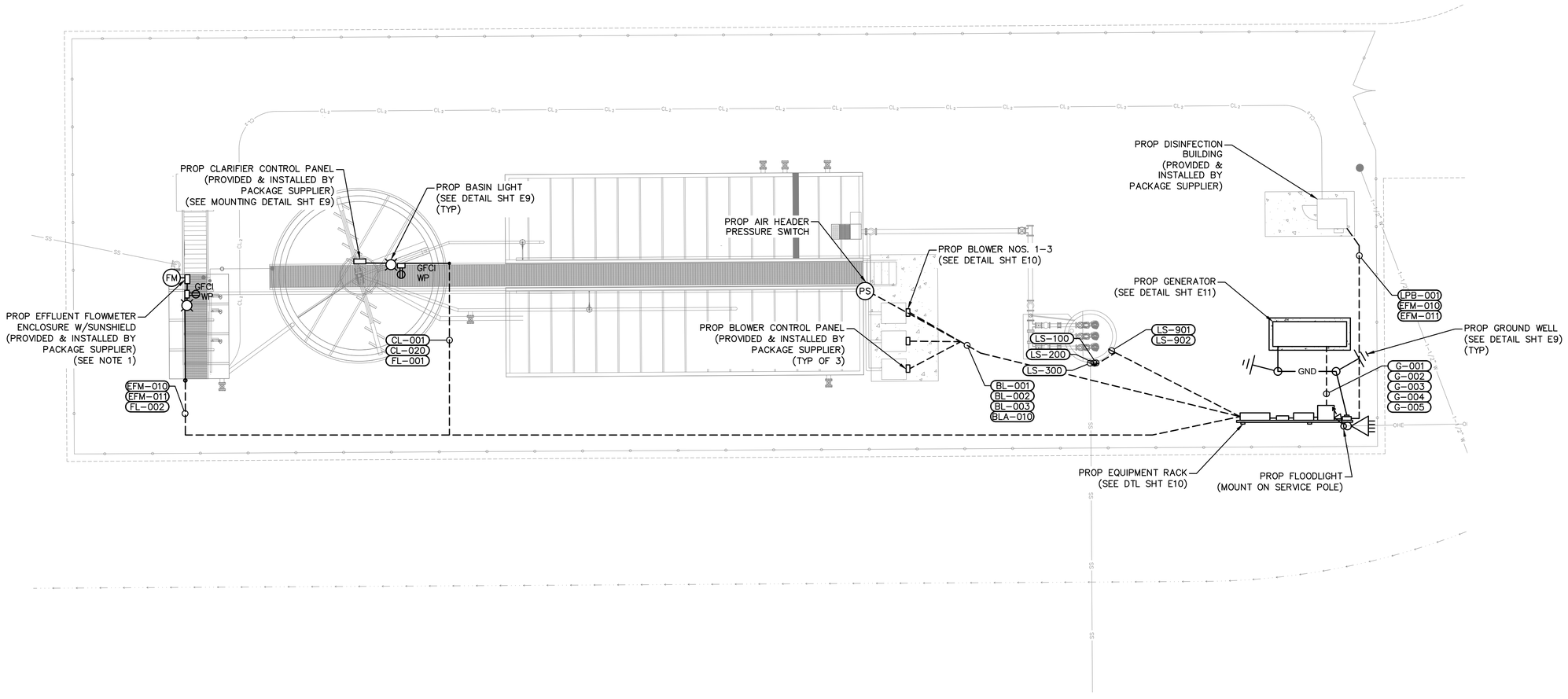

REV	DATE	BY	APP	COMMENT

CITY OF IOLA
P.O. BOX 84
IOLA, TEXAS 77861
TPDES WQ0016021–001

BLEYL ENGINEERING
PLANNING • DESIGN • MANAGEMENT
1722 Broadmoor, Suite 210, Bryan Tx. 77802
Texas Firm Registration No. F-678
Tel. 979-268-1125 Fax 979-260-3849
www.bleylengineering.com

AUSTIN BRYAN CONROE HOUSTON

ELECTRICAL SITE LAYOUT

CITY OF IOLA
0.100 MGD WASTEWATER TREATMENT PLANT
TWDB CWSRF PROJECT NO. 10422

STATE OF TEXAS
SHANE R. MECKE
124906
LICENSED PROFESSIONAL ENGINEER
12/3/25

BAIRD GILROY & DIXON
ELECTRICAL ENGINEERS
9711 S. Mason Rd.
Ste. 125 #326
Richmond, TX 77407
(281) 529–5005
www.bgdeng.com
TBPE No. F–16575
Job No. 103–0153

DESIGN: CDM	
CAD: CDM	RVW: SRM
PROJECT NO:	12693
SHEET: E3	OF: E13

COLEMCMILLIN 12/3/2025 6:35:59 PM
P:\PROJECTS\103-BLEYL\0153-IOLA WASTEWATER SYSTEM\03 CAD\103-0153 ELEC.DWG

ORIGINAL LAYOUT SIZE – 22X34

NOTES:

1. ALL PROPOSED ELECTRICAL EQUIPMENT/ENCLOSURES SHALL BE NEMA 3R PAINTED STEEL.

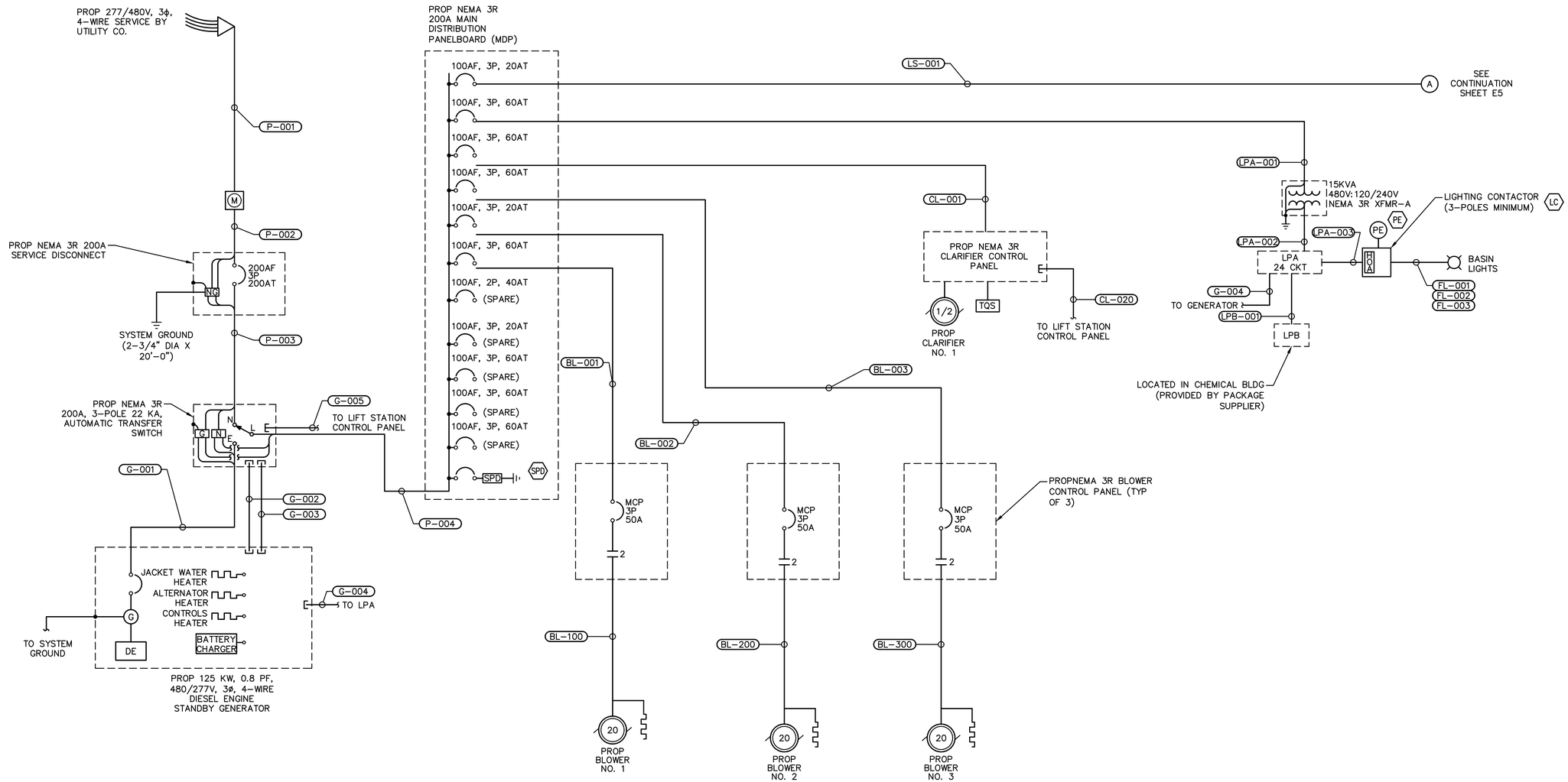

ELECTRICAL LOAD ANALYSIS

LOAD NAME		AMPS ØA	AMPS ØB	AMPS ØC	GEN SBKW
BLOWER NO. 1	20 HP	27	27	27	17
BLOWER NO. 2	20 HP	27	27	27	17
BLOWER NO. 3	20 HP	27	27	27	-
CLARIFIER NO. 1	1/2 HP	1.1	1.1	1.1	0.5
LIFT PUMP NO. 1	5 HP	7.6	7.6	7.6	4.5
LIFT PUMP NO. 2	5 HP	7.6	7.6	7.6	4.5
LIFT PUMP NO. 3	5 HP	7.6	7.6	7.6	4.5
LIGHTING TRANSFORMER	25 KVA	31.2	-	31.2	15
25% LARGEST MOTOR		6.8	6.8	6.8	
TOTAL LOAD		**142.9**	**111.7**	**142.9**	**63**
RATED SERVICE AMPACITY @ 480 VOLT, 3Ø, 4-WIRE		**200**	**200**	**200**	
SPARE AMPACITY		**57.2**	**88.35**	**57.2**	
FAULT CURRENT					**< 22 K.A.I.C.**

ONE-LINE DIAGRAM

NOT TO SCALE

REV	DATE	BY	APP	COMMENT

CITY OF IOLA
P.O. BOX 84
IOLA, TEXAS 77861
TPDES WQ0016021-001

BLEYL ENGINEERING
PLANNING • DESIGN • MANAGEMENT
1722 Broadmoor, Suite 210, Bryan Tx. 77802
Texas Firm Registration No. F-678
Tel. 979-268-1125 Fax 979-260-3849
www.bleylengineering.com
AUSTIN BRYAN CONROE HOUSTON

ELECTRICAL ONE-LINE DIAGRAM
SHEET 1 OF 2

CITY OF IOLA
0.100 MGD WASTEWATER TREATMENT PLANT
TWDB CWSRF PROJECT NO. 10422

STATE OF TEXAS
SHANE R. MECKE
124906
LICENSED PROFESSIONAL ENGINEER
12/3/25

BAIRD GILROY & DIXON
ELECTRICAL ENGINEERS
9711 S. Mason Rd.
Ste. 125 #326
Richmond, TX 77407
(281) 529-5005
www.bgdeng.com
TBPE No. F-16575
Job No. 103-0153

DESIGN: CDM	
CAD: CDM	RVW: SRM
PROJECT NO:	12693
SHEET: E4	OF: E13

COLEMCMILLIN 12/3/2025 6:36:00 PM
P:\PROJECTS\103-BLEYL\0153-IOLA WASTEWATER SYSTEM\03 CAD\103-0153 ELEC.DWG

ORIGINAL LAYOUT SIZE – 22X34

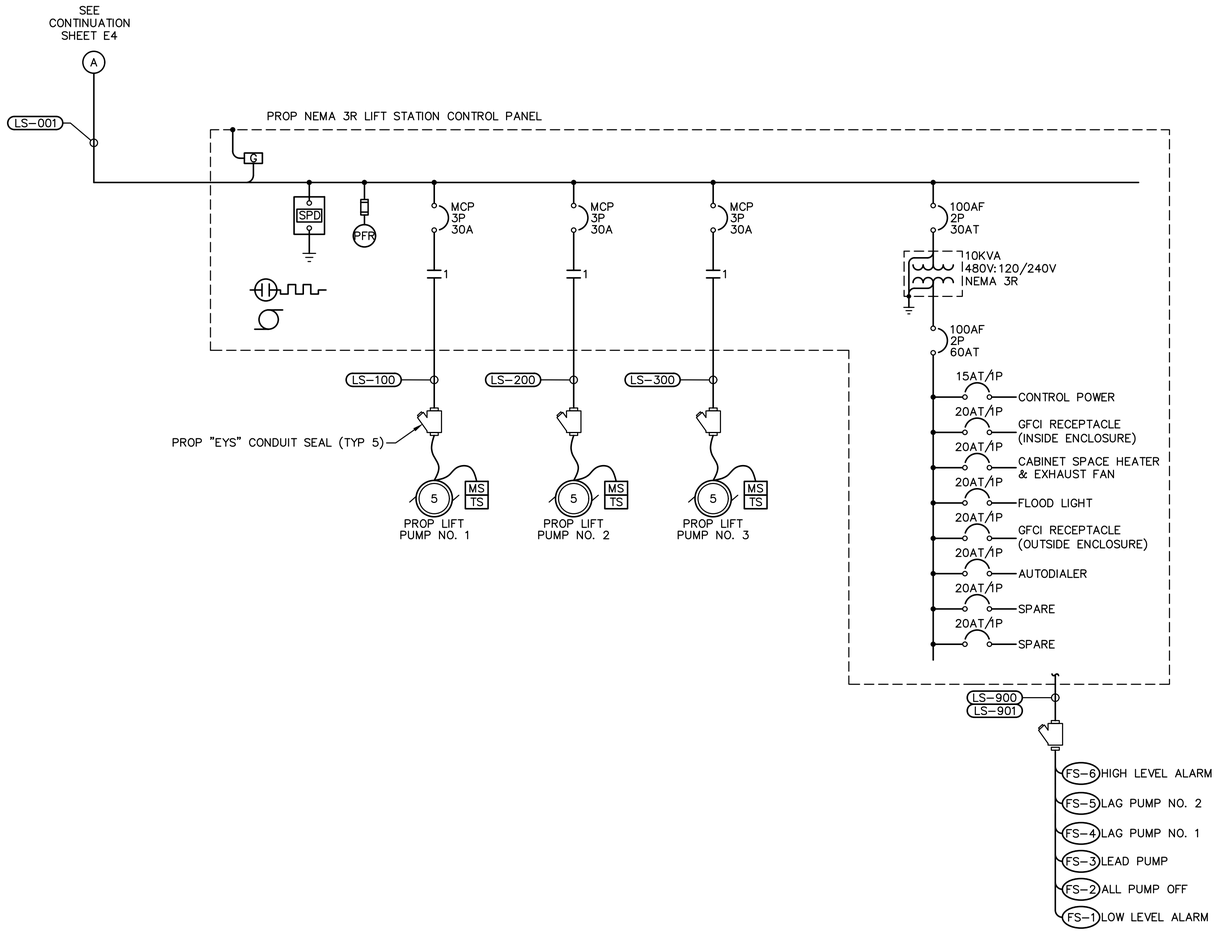

LIFT STATION ONE-LINE DIAGRAM

NOT TO SCALE

REV	DATE	BY	APP	COMMENT

CITY OF IOLA
P.O. BOX 84
IOLA, TEXAS 77861
TPDES WQ0016021-001

BLEYL ENGINEERING
PLANNING • DESIGN • MANAGEMENT
1722 Broadmoor, Suite 210, Bryan Tx. 77802
Texas Firm Registration No. F-678
Tel. 979-268-1125 Fax 979-260-3849
www.bleylengineering.com

AUSTIN BRYAN CONROE HOUSTON

ELECTRICAL ONE-LINE DIAGRAM
SHEET 2 OF 2

CITY OF IOLA
0.100 MGD WASTEWATER
TREATMENT PLANT

TWDB CWSRF PROJECT NO. 10422

STATE OF TEXAS
SHANE R. MECKE
124906
LICENSED PROFESSIONAL ENGINEER
12/3/25

BAIRD GILROY & DIXON
ELECTRICAL ENGINEERS
9711 S. Mason Rd.
Ste. 125 #326
Richmond, TX 77407
(281) 529-5005
www.bgdeng.com
TBPE No. F-16575
Job No. 103-0153

DESIGN: CDM	
CAD: CDM	RVW: SRM
PROJECT NO:	12693
SHEET: E5	OF: E13

COLEMCMILLIN 12/3/2025 6:36:01 PM
P:\PROJECTS\103-BLEYL\0153-IOLA WASTEWATER SYSTEM\03 CAD\103-0153 ELEC.DWG

ORIGINAL LAYOUT SIZE – 22X34

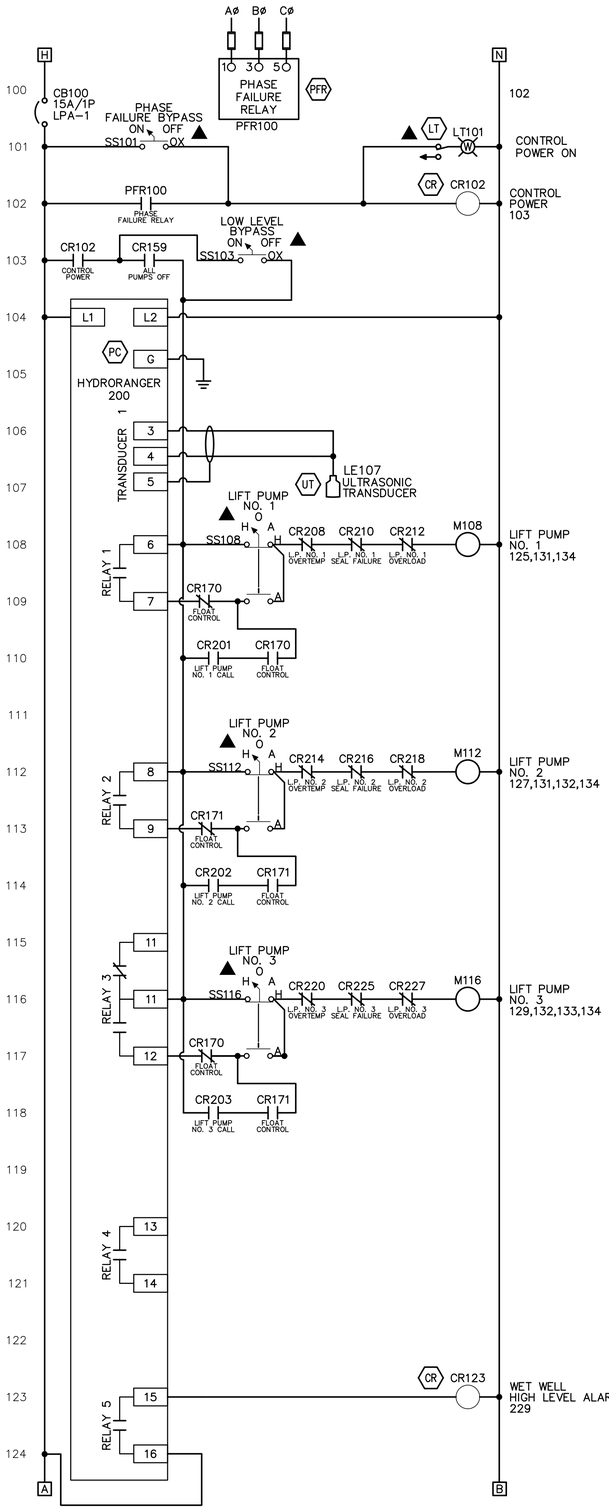

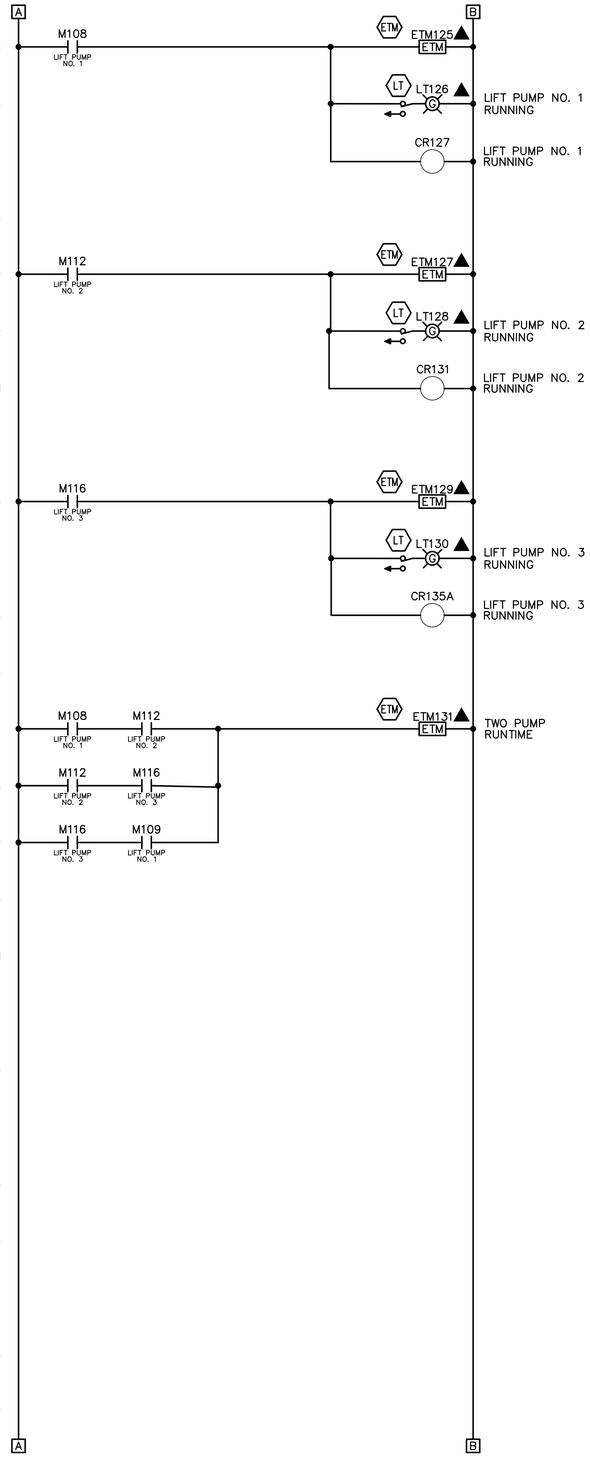

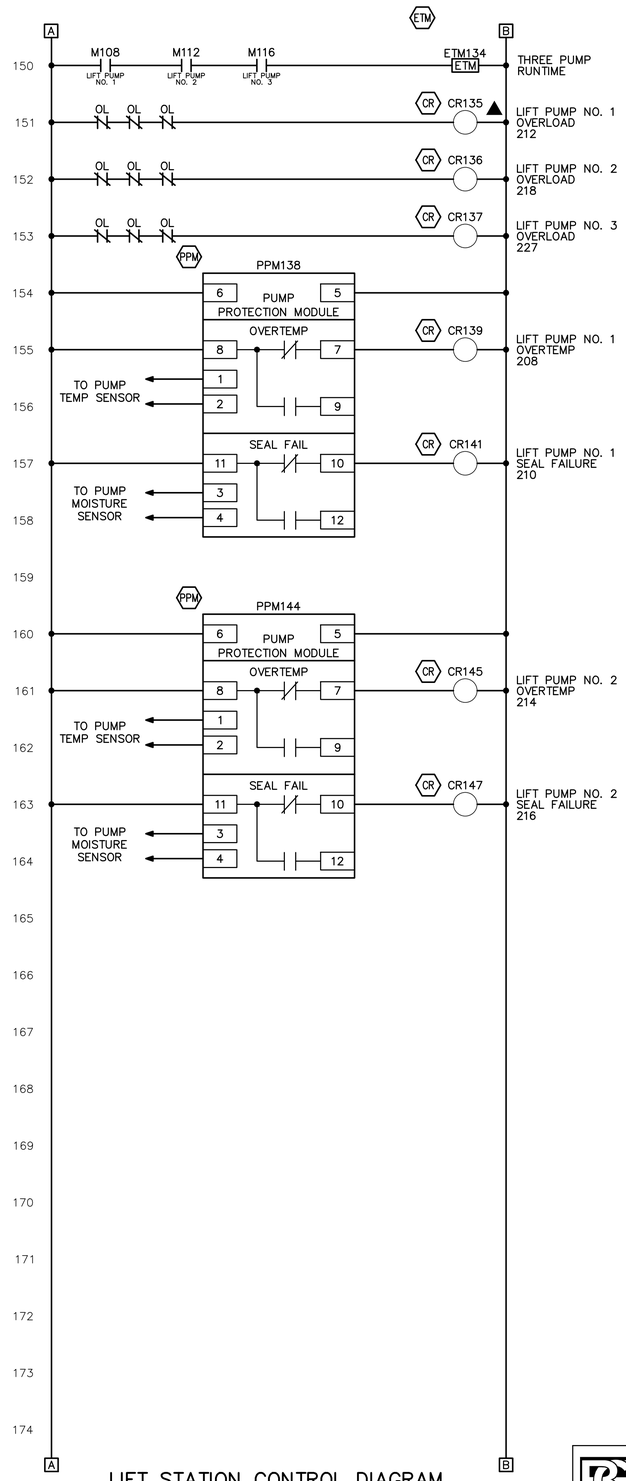

LIFT STATION CONTROL DIAGRAM

NOT TO SCALE

BLEYL ENGINEERING
PLANNING • DESIGN • MANAGEMENT
1722 Broadmoor, Suite 210, Bryan Tx. 77802
Texas Firm Registration No. F-678
Tel. 979-268-1125 Fax 979-260-3849
www.bleylengineering.com
AUSTIN BRYAN CONROE HOUSTON

REV	DATE	BY	APP	COMMENT

CITY OF IOLA
P.O. BOX 84
IOLA, TEXAS 77861
TPDES WQ0016021-001

ELECTRICAL CONTROL DIAGRAMS
SHEET 1 OF 3

CITY OF IOLA
0.100 MGD WASTEWATER
TREATMENT PLANT

TWDB CWSRF PROJECT NO. 10422

STATE OF TEXAS
SHANE R. MECKE
124906
LICENSED PROFESSIONAL ENGINEER
12/3/25

BAIRD GILROY & DIXON
ELECTRICAL ENGINEERS
9711 S. Mason Rd.
Ste. 125 #326
Richmond, TX 77407
(281) 529-5005
www.bgdeng.com
TBPE No. F-16575
Job No. 103-0153

DESIGN: CDM	
CAD: CDM	RVW: SRM
PROJECT NO:	12693
SHEET: E6	OF: E13

SRM_DESKTOP 12/3/2025 6:36:03 PM
P:\PROJECTS\103-BLEYL\0153-IOLA WASTEWATER SYSTEM\03 CAD\103-0153 CONTROLS.DWG

ORIGINAL LAYOUT SIZE – 22X34

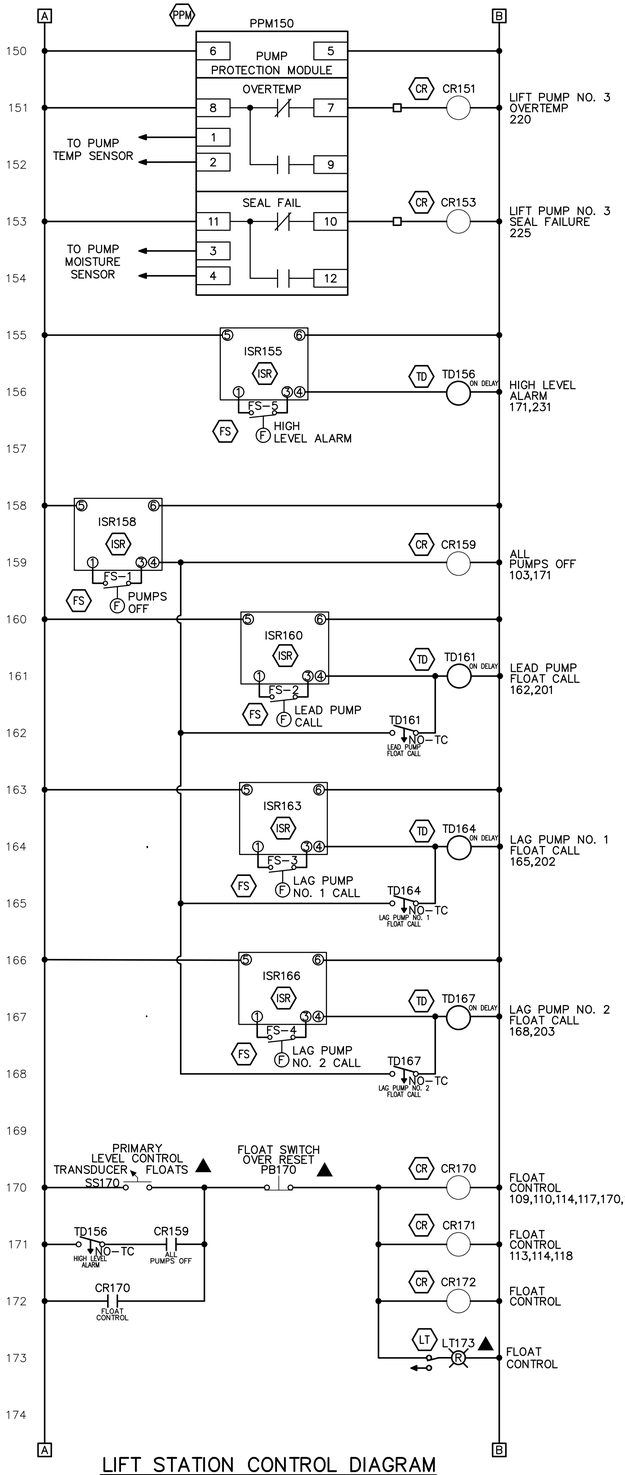

LIFT STATION CONTROL DIAGRAM
NOT TO SCALE

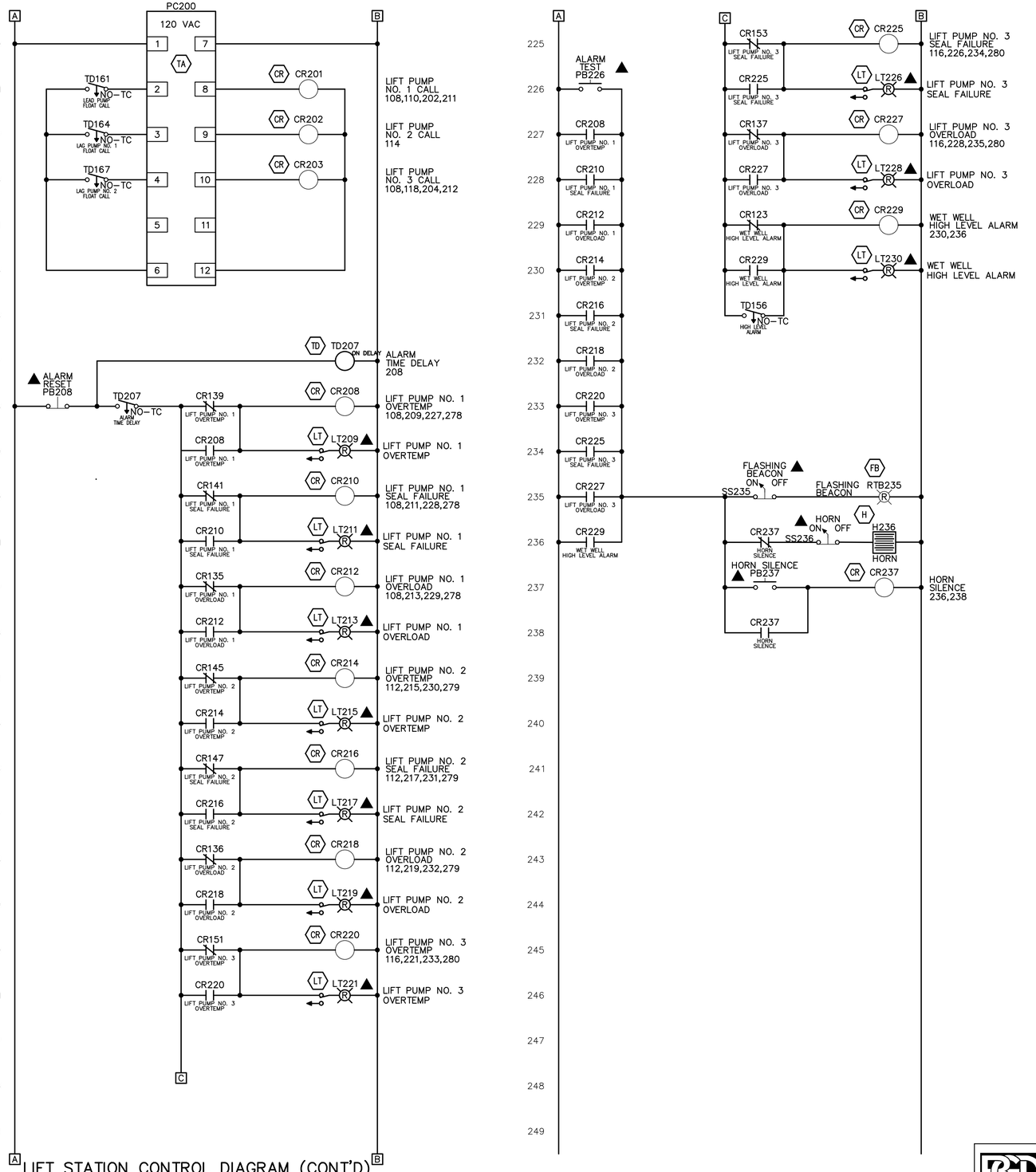

LIFT STATION CONTROL DIAGRAM (CONT'D)
NOT TO SCALE

REV	DATE	BY	APP	COMMENT

CITY OF IOLA
P.O. BOX 84
IOLA, TEXAS 77861
TPDES WQ0016021-001

BLEYL ENGINEERING
PLANNING • DESIGN • MANAGEMENT
1722 Broadmoor, Suite 210, Bryan Tx. 77802
Texas Firm Registration No. F-678
Tel. 979-268-1125 Fax 979-260-3849
www.bleylengineering.com
AUSTIN | BRYAN | CONROE | HOUSTON

ELECTRICAL CONTROL DIAGRAMS
SHEET 2 OF 3

CITY OF IOLA
0.100 MGD WASTEWATER TREATMENT PLANT
TWDB CWSRP PROJECT NO. 10422

STATE OF TEXAS
SHANE R. MECKE
124906
LICENSED PROFESSIONAL ENGINEER
12/3/25

BAIRD GILROY & DIXON
ELECTRICAL ENGINEERS
9711 S. Mason Rd.
Ste. 125 #326
Richmond, TX 77407
(281) 529-5005
www.bgdeng.com
TBPE No. F-16575
Job No. 103-0153

DESIGN: CDM	
CAD: CDM	RVW: SRM
PROJECT NO:	12693
SHEET: E7	OF: E13

SRM_DESKTOP 12/3/2025 6:36:04 PM
P:\PROJECTS\103-BLEYL\0153-IOLA WASTEWATER SYSTEM\03 CAD\103-0153 CONTROLS.DWG

ORIGINAL LAYOUT SIZE – 22X34

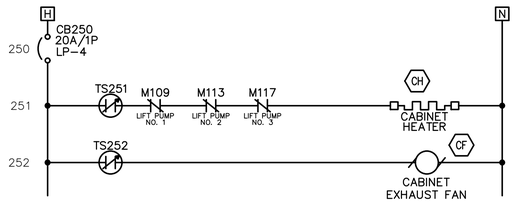

CABINET HEATER & FAN CONTROL DIAGRAM
NOT TO SCALE

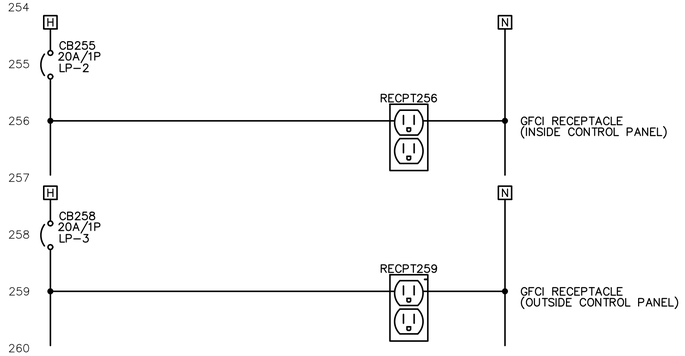

LIFT STATION CONTROL DIAGRAM (CONT'D)
NOT TO SCALE

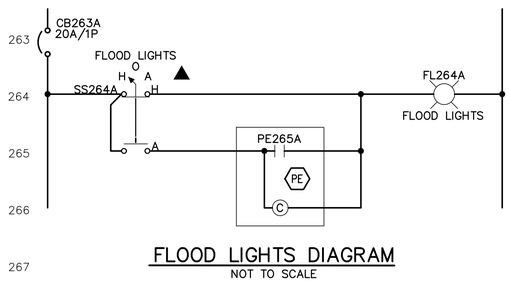

FLOOD LIGHTS DIAGRAM
NOT TO SCALE

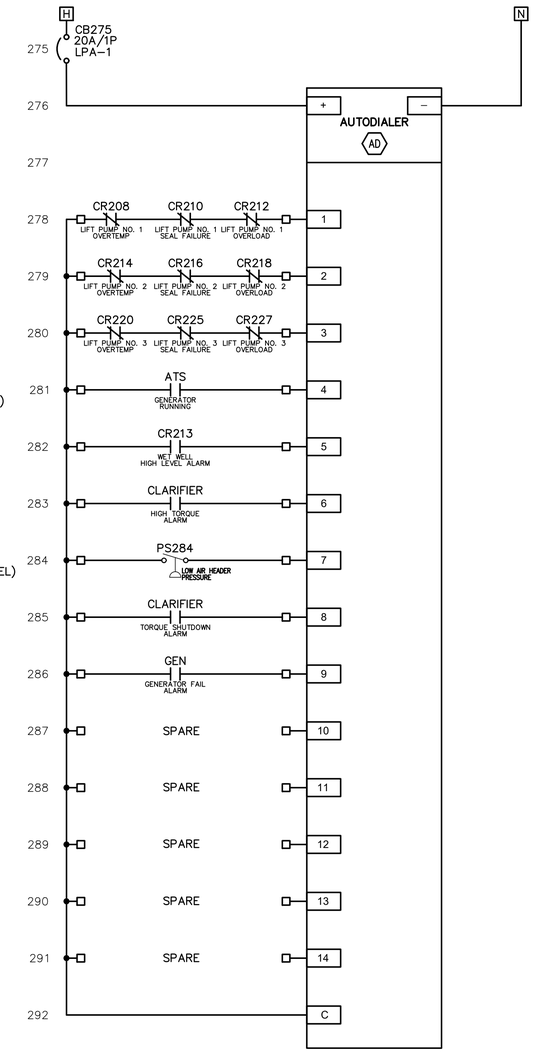

AUTODIALER CONTROL DIAGRAM
NOT TO SCALE

REV	DATE	BY	APP	COMMENT

CITY OF IOLA
P.O. BOX 84
IOLA, TEXAS 77861
TPDES WQ0016021-001

BLEYL ENGINEERING
PLANNING • DESIGN • MANAGEMENT
1722 Broadmoor, Suite 210, Bryan Tx. 77802
Texas Firm Registration No. F-678
Tel. 979-268-1125 Fax 979-260-3849
www.bleylengineering.com
BRYAN CONROE HOUSTON AUSTIN

ELECTRICAL CONTROL DIAGRAMS
SHEET 3 OF 3

CITY OF IOLA
0.100 MGD WASTEWATER
TREATMENT PLANT
TWDB CWSRP PROJECT NO. 10422

STATE OF TEXAS
SHANE R. MECKE
124906
LICENSED
PROFESSIONAL ENGINEER
12/3/25

BAIRD GILROY & DIXON
ELECTRICAL ENGINEERS
9711 S. Mason Rd.
Ste. 125 #326
Richmond, TX 77407
(281) 529-5005
www.bgdeng.com
TBPE No. F-16575
Job No. 103-0153

DESIGN:	CDM
CAD: CDM	RVW: SRM
PROJECT NO:	12693
SHEET: E8	OF: E13

SRM_DESKTOP 12/3/2025 6:36:05 PM
P:\PROJECTS\103-BLEYL\0153-IOLA WASTEWATER SYSTEM\03 CAD\103-0153 CONTROLS.DWG

ORIGINAL LAYOUT SIZE – 22X34

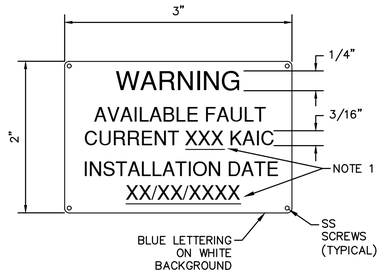

FAULT CURRENT WARNING SIGN DETAIL

NOT TO SCALE

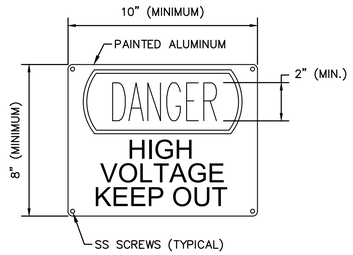

HIGH VOLTAGE SIGN DETAIL

NOT TO SCALE

NOTE:
INSTALL SIGNS ON ALL ELECTRICAL ENCLOSURES.

UNDERGROUND CONDUIT CONSTRUCTION

NOT TO SCALE

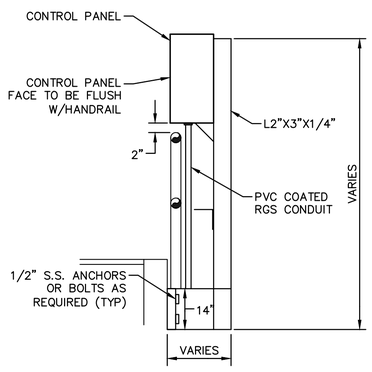

GUSSET

CONSTRUCTED OF 1/4" PLATE

NOTES:

1. CONDUIT REQUIREMENTS FOR EACH CONTROL PANEL MAY VARY. SEE ONE-LINE DIAGRAM, CONDUIT SCHEDULE, AND VENDOR REQUIREMENTS FOR NUMBER OF CONDUITS REQUIRED.
2. FABRICATE TO MEET ENCLOSURE AND INSTALLATION REQUIREMENTS FOR EACH PANEL LOCATION. SUBMIT DETAILS FOR ENGINEER'S APPROVAL PRIOR TO FABRICATION.

CONTROL PANEL MOUNTING DETAIL

NOT TO SCALE

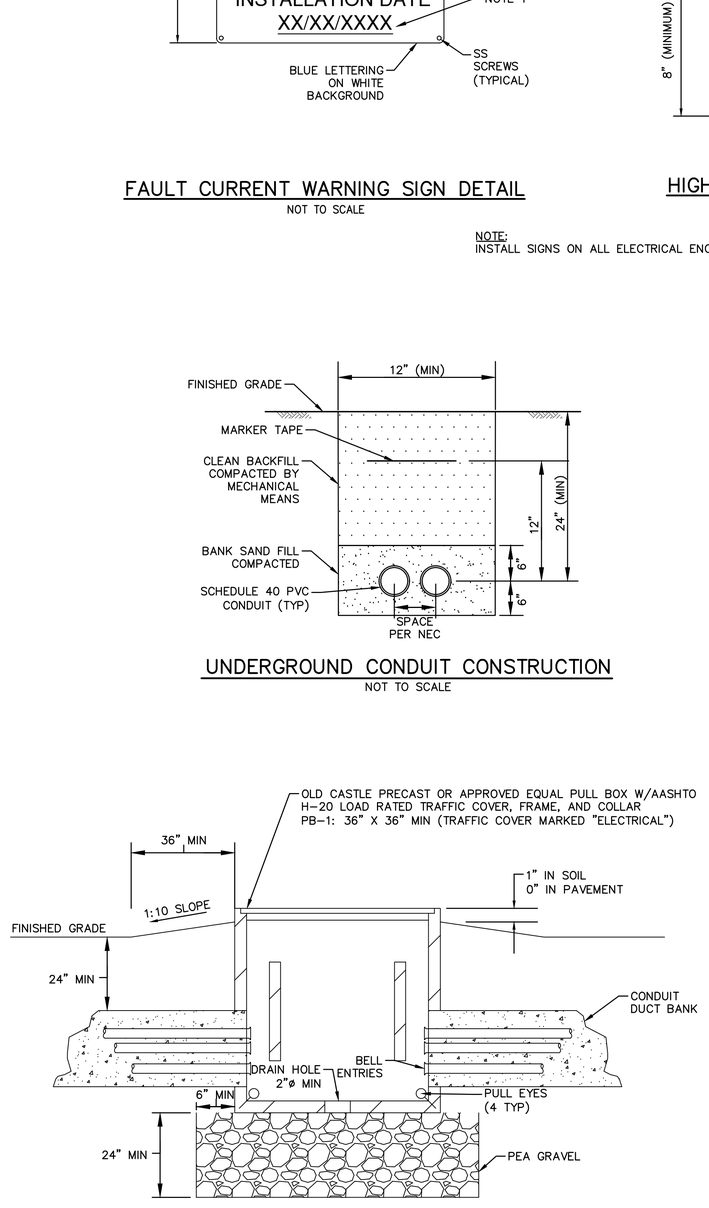

PULL BOX DETAIL

NOT TO SCALE

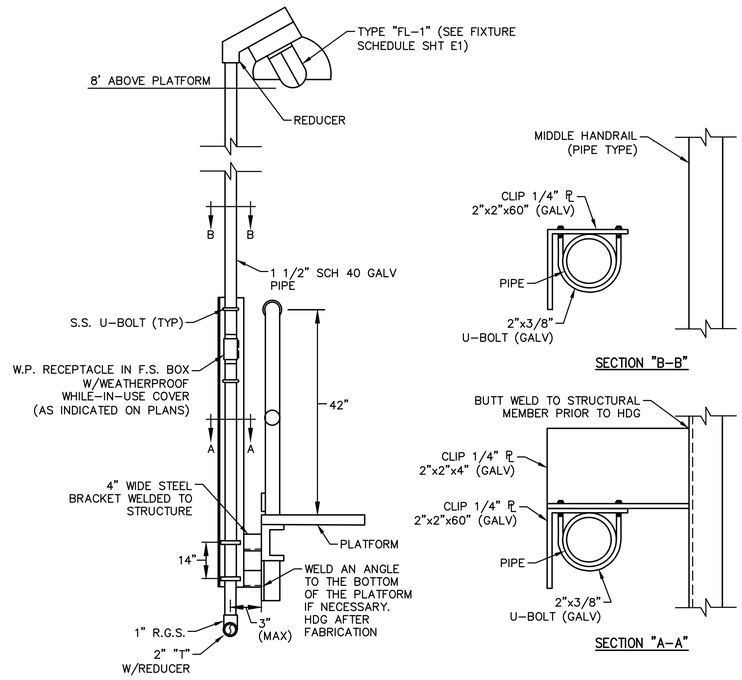

BASIN FLOOD LIGHT FIXTURE MOUNTING DETAIL

NOT TO SCALE

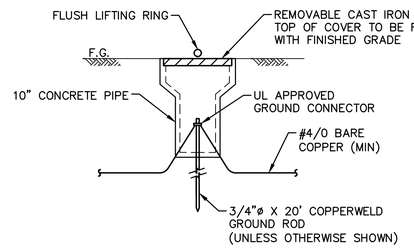

GROUND WELL DETAIL

NOT TO SCALE

REV	DATE	BY	APP	COMMENT

CITY OF IOLA
P.O. BOX 84
IOLA, TEXAS 77861
TPDES WQ0016021-001

BLEYL ENGINEERING
PLANNING • DESIGN • MANAGEMENT
1722 Broadmoor, Suite 210, Bryan Tx. 77802
Texas Firm Registration No. F-678
Tel. 979-268-1125 Fax 979-260-3849
www.bleylengineering.com
AUSTIN BRYAN CONROE HOUSTON

ELECTRICAL DETAILS
SHEET 1 OF 4

CITY OF IOLA
0.100 MGD WASTEWATER
TREATMENT PLANT

TWDB CWSRF PROJECT NO. 10422

STATE OF TEXAS
SHANE R. MECKE
124906
LICENSED
PROFESSIONAL ENGINEER
12/3/25

BAIRD GILROY & DIXON
ELECTRICAL ENGINEERS
9711 S. Mason Rd.
Ste. 125 #326
Richmond, TX 77407
(281) 529-5005
www.bgdeng.com
TBPE No. F-16575
Job No. 103-0153

DESIGN: CDM	
CAD: CDM	RVW: SRM
PROJECT NO:	12693
SHEET: E9	OF: E13

COLEMCMILLIN 12/3/2025 6:36:06 PM
P:\PROJECTS\103-BLEYL\0153-IOLA WASTEWATER SYSTEM\03 CAD\103-0153 ELEC.DWG

ORIGINAL LAYOUT SIZE – 22X34

NOTES:

1. INSTALL PROPOSED NEMA 3R LIGHTING CONTACTOR ON BACKSIDE OF LIGHTING PANEL.
2. INSTALL PROPOSED FLOODLIGHT 12' ABOVE FINISHED GRADE.

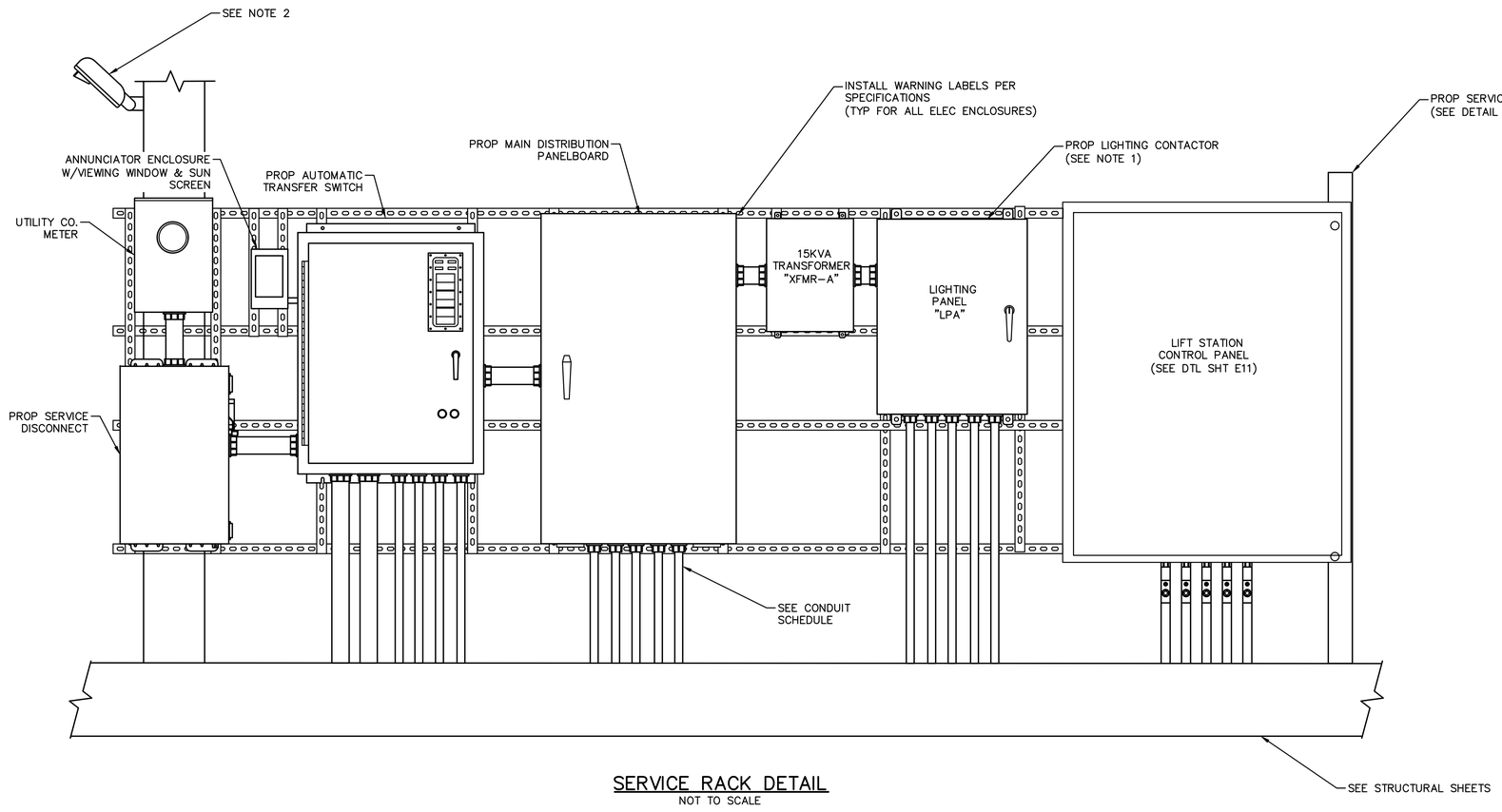

SERVICE RACK DETAIL
NOT TO SCALE

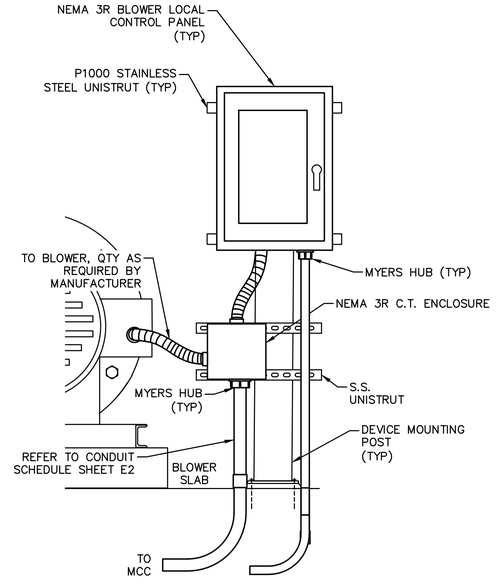

BLOWER MOTOR CONNECTION DETAIL
NOT TO SCALE
(TYP)

REV	DATE	BY	APP	COMMENT

CITY OF IOLA
P.O. BOX 84
IOLA, TEXAS 77861
TPDES WQ0016021–001

BLEYL ENGINEERING
PLANNING • DESIGN • MANAGEMENT
1722 Broadmoor, Suite 210, Bryan Tx. 77802
Texas Firm Registration No. F-678
Tel. 979-268-1125 Fax 979-260-3849
www.bleylengineering.com

AUSTIN | BRYAN | CONROE | HOUSTON

ELECTRICAL DETAILS
SHEET 2 OF 4

CITY OF IOLA
0.100 MGD WASTEWATER TREATMENT PLANT
TWDB CWSRF PROJECT NO. 10422

STATE OF TEXAS
SHANE R. MECKE
124906
LICENSED PROFESSIONAL ENGINEER
12/3/25

BAIRD GILROY & DIXON
ELECTRICAL ENGINEERS
9711 S. Mason Rd.
Ste. 125 #326
Richmond, TX 77407
(281) 529-5005
www.bgdeng.com
TBPE No. F-16575
Job No. 103-0153

DESIGN: CDM	
CAD: CDM	RVW: SRM
PROJECT NO:	12693
SHEET: E10	OF: E13

COLEMCMILLIN 12/3/2025 6:36:08 PM
P:\PROJECTS\103-BLEYL\0153-IOLA WASTEWATER SYSTEM\03 CAD\103-0153 ELEC.DWG

ORIGINAL LAYOUT SIZE – 22X34

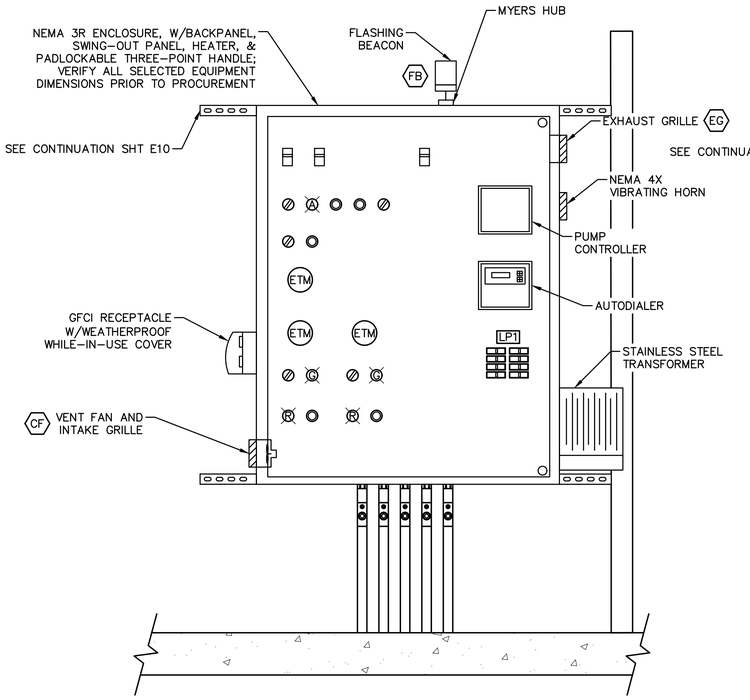

SWING–OUT PANEL ARRANGEMENT
NOT TO SCALE

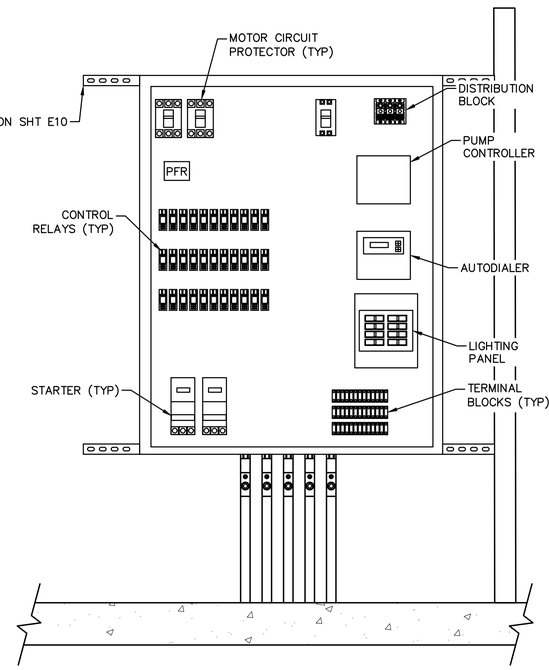

BACK PANEL ARRANGEMENT
NOT TO SCALE

CONTROL PANEL DETAIL
(SHOWN WITH OUTER DOOR REMOVED)
NOT TO SCALE

NAMEPLATE NOTE:

NAMEPLATES SHALL BE CONSTRUCTED FROM LAMINATED PLASTIC MATERIAL A MINIMUM OF 1/16" THICK. LETTERS SHALL BE GOTHIC 3/16" HIGH MINIMUM, USE TWO LINES IF DESCRIPTION WILL CAUSE LENGTH TO EXCEED 2 1/2". ALARM NAMEPLATES SHALL BE WHITE LETTERS ON BLACK BACKGROUND. AFFIX NAMEPLATES TO PANEL USING SELF–TAPPING STAINLESS STEEL SCREWS. SUBMIT DETAILS WITH SHOP DRAWINGS.

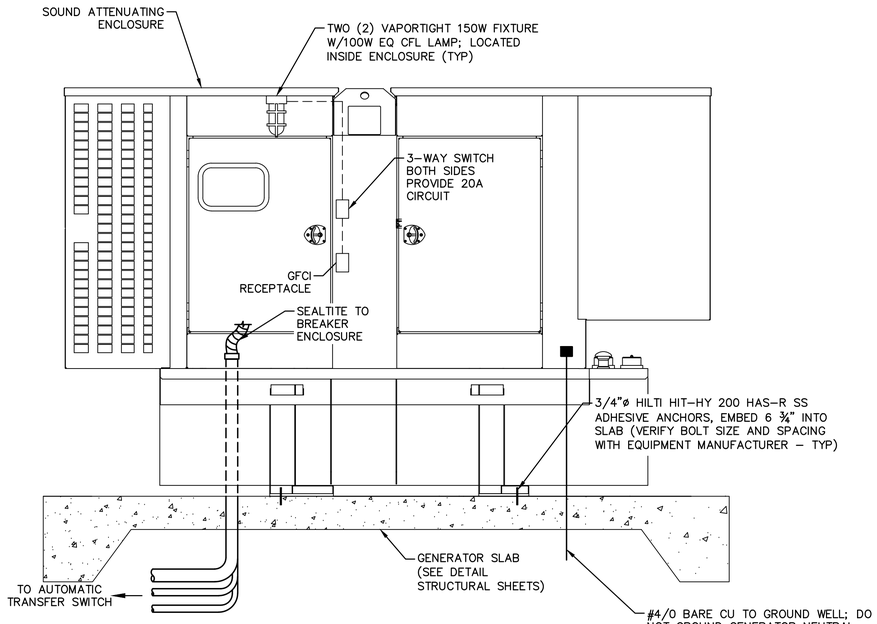

NOTE:
INSTALLATION SHOWN IS TYPICAL. CONDUIT STUB–UP LOCATION, PANEL ACCESS, ORIENTATION, FUEL LINE ENTRANCE, AND CONTROLS MAY VARY ACCORDING TO GENERATOR MANUFACTURER. MODIFY INSTALLATION ACCORDINGLY.

GENERATOR INSTALLATION DETAIL
NOT TO SCALE

REV	DATE	BY	APP	COMMENT

CITY OF IOLA
P.O. BOX 84
IOLA, TEXAS 77861
TPDES WQ0016021–001

BLEYL ENGINEERING
PLANNING • DESIGN • MANAGEMENT
1722 Broadmoor, Suite 210, Bryan Tx. 77802
Texas Firm Registration No. F-678
Tel. 979-268-1125 Fax 979-260-3849
www.bleylengineering.com
BRYAN CONROE HOUSTON AUSTIN

ELECTRICAL DETAILS
SHEET 3 OF 4

CITY OF IOLA
0.100 MGD WASTEWATER TREATMENT PLANT
TWDB CWSRF PROJECT NO. 10422

STATE OF TEXAS
SHANE R. MECKE
124906
LICENSED PROFESSIONAL ENGINEER
12/3/25

BAIRD GILROY & DIXON
ELECTRICAL ENGINEERS
9711 S. Mason Rd.
Ste. 125 #326
Richmond, TX 77407
(281) 529-5005
www.bgdeng.com
TBPE No. F-16575
Job No. 103-0153

DESIGN: CDM	
CAD: CDM	RVW: SRM
PROJECT NO:	12693
SHEET: E11	OF: E13

COLEMCMILLIN 12/3/2025 6:36:09 PM
P:\PROJECTS\103-BLEYL\0153-IOLA WASTEWATER SYSTEM\03 CAD\103-0153 ELEC.DWG

ORIGINAL LAYOUT SIZE – 22X34

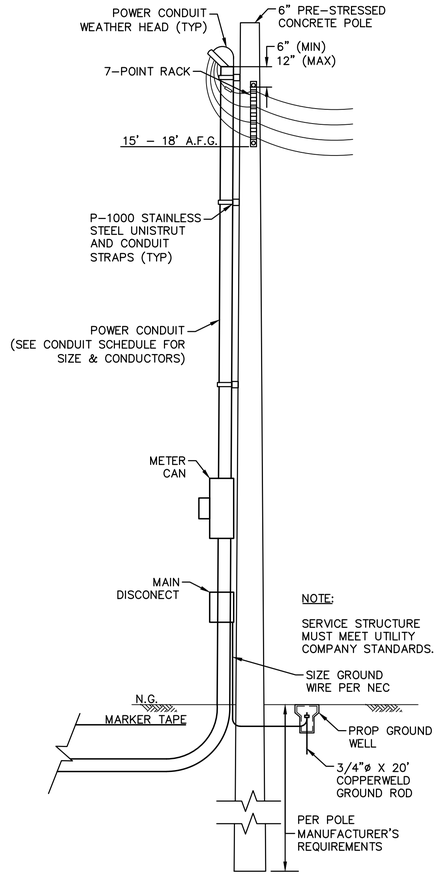

SERVICE POLE DETAIL
NOT TO SCALE

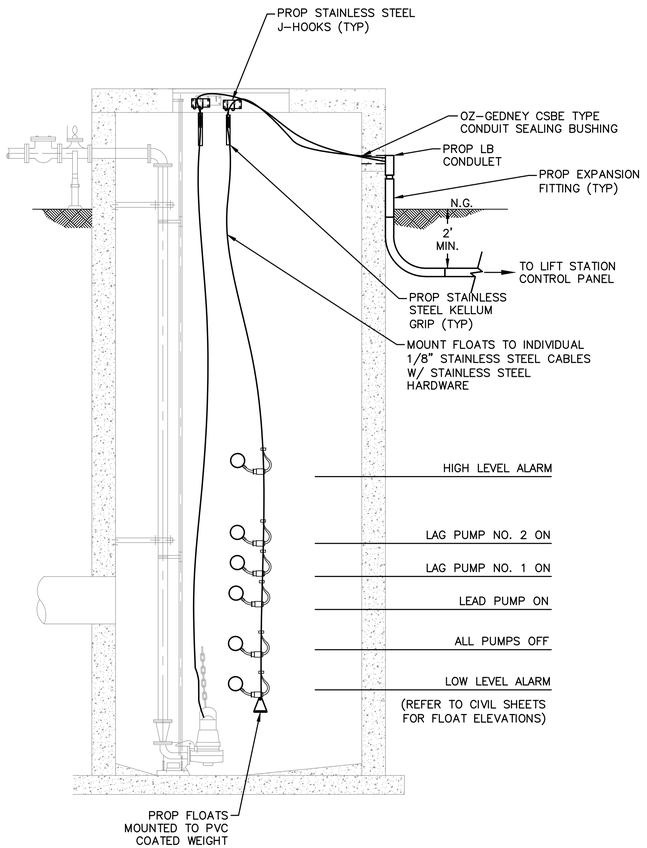

WET WELL PROFILE DETAIL
NOT TO SCALE

REV	DATE	BY	APP	COMMENT

CITY OF IOLA
P.O. BOX 84
IOLA, TEXAS 77861
TPDES WQ0016021-001

BLEYL ENGINEERING
PLANNING • DESIGN • MANAGEMENT
1722 Broadmoor, Suite 210, Bryan Tx. 77802
Texas Firm Registration No. F-678
Tel. 979-268-1125 Fax 979-260-3849
www.bleylengineering.com
AUSTIN | BRYAN | CONROE | HOUSTON

ELECTRICAL DETAILS
SHEET 4 OF 4

CITY OF IOLA
0.100 MGD WASTEWATER
TREATMENT PLANT
TWDB CWSRF PROJECT NO. 10422

STATE OF TEXAS
SHANE R. MECKE
124906
LICENSED
PROFESSIONAL ENGINEER
12/3/25

BAIRD GILROY & DIXON
ELECTRICAL ENGINEERS
9711 S. Mason Rd.
Ste. 125 #326
Richmond, TX 77407
(281) 529-5005
www.bgdeng.com
TBPE No. F-16575
Job No. 103-0153

DESIGN: CDM	
CAD: CDM	RVW: SRM
PROJECT NO:	12693
SHEET: E12	OF: E13

COLEMCMILLIN 12/3/2025 6:36:10 PM
P:\PROJECTS\103-BLEYL\0153-IOLA WASTEWATER SYSTEM\03 CAD\103-0153 ELEC.DWG